CHINT ELECTRIC

Empower the World

CHINT.NO.EN B94

Europe

Italy
CHINT Italia Investment S.r.l.

Add: Via A. Pacinotti 28, 30033 Noale (VE)
Tel: +39 041.446614 Fax +39 041.5845900
Cell: +39 335 626 5032 E-mail: chint_eu@chint.com

Czech Republic
NOARK Electric Europe s.r.o.

Add: Sezemická 2757/2, 193 00 Prague 9
Tel: +420 226 203 120 Email: Europe@noark-electric.com

Turkey
Chint Turca Elektrik Sanayi VE Ticaret Anonim Sirketi

Add: Zumrutevler Mahallesi Ural Sokak No. 22/18 NAS PLAZA B Block KAT 1, Maltepe, Istanbul
Tel: +90216 621 00 55 Fax.:+90216 621 00 50
E-mail: fatura@chint.com.tr

Spain
CHINT Electrics S.L.

Add: Calle José Echegaray, Num 8.Parque Empresarial Las Rozas Edificio 3, Planta Baja, Oficina 7-8.C.P: 28232 Las Rozas (Madrid)
Tel: 0034 91 636 59 98 Fax: 0034 91 645 95 82
E-mail: info@chint.eu

Russia
ООО "Чинт Электрик"

Юридический адрес: 109544, г. Москва, б-р Энтузиастов, д. 2, этаж 19, ком. 71; 72
Фактический адрес: РФ, 109544, г. Москва, б-р Энтузиастов, д. 2
Тел: +7 (495) 540-61-41
Тел: +7 (800) 222-61-41
E-mail: cis@chint.com

North America

United States
NOARK Electric (USA) Inc.

Add: 2188 Pomona Blvd., Pomona, CA 91767
Tel: 626-330-7007 Fax: 626-330-8035
E-mail: nasales@noark-electric.com

Mexico
CHINT SOLAR MEXICO S DE RL DE CV

Add: Av. Paseo de la Reforma 296, Piso 37, Oficina 123
Juárez, Ciudad de México, 06600
Tel: +52 1-55-8881-6127
E-mail: marie.casillas@chint-mexico.com

West Asia & Africa

U.A.E
CHINT MIDDLE EAST AND AFRICA DMCC

Add: Unit No: 2101, Jumeirah business center 1 , Jumeirah Lakes Towers , Dubai UAE
Tel: +97145571532
P.O BOX :337555
Email: chintwaa@chint.com

Egypt
CHINT Electrics (Egypt) Co., Ltd.

Add: Chint office, Smart village, October 6th,Giza, Egypt
Tel: +20 1097173769
P.O BOX : 00202
Email: chinteg@chint.com

Latin America

Brazil
CHINT Electrics South America Ltd

Add: Av. Paulista, 1765 - Edifício Scarpa-Conj.22
Bela Vista –CEP 01311-200-São Paulo- SP
Tel: 0055-11-3266-7654
E-mail: chintlatinamerica@chint.com, xjie@chint.com

Peru
CHINT LATAM(PERU) S.A.C.

Add.: Camino Real 348 oficina 603, San Isidro, Lima
Tel.: +51 1 763 4917
Email: chintlatamperu@chint.com; yn@chint.com

Asia Pacific

China
Zhejiang CHINT Electrics Co., Ltd.

Add (Shanghai) : Bldg.2, No.3255 Sixian Road, Songjiang 201614 P.R.China
Tel: 0086-21-67777706
Fax: 0086-21-67777777-88225
E-mail: asiapacific@chint.com

India
Astronergy Solar India Pvt Ltd. (A Chint company)

Discovery Tower Plot No A-17, Ground Floor, Sector – 62 Noida – 201301
Ph. +91-9717585800
Landline :- 0120-2975777

CHINT ELECTRIC

Zhejiang Chint Electrics Co., Ltd.

Add: No. 1, CHINT Road, CHINT Industrial Zone, North Baixiang, Yueqing, Zhejiang, 325603, P.R.China
Tel: 4001177797
Fax: +86-577-62775769 62871811
E-mail: global-sales@chint.com
Website: http://en.chint.com/

2019

Specifications and technical data are subject to change without notice.
Please contact us to confirm relevant information on ordering

CHINT ELECTRIC

Empower the World

NA1 Air Circuit Breaker

CHINT , Smart Energy Solution Provider

CHINT is a world renowned smart energy solution provider.

To comply with the trend of integrated development of modern energy, intelligent manufacturing and digital technology, CHINT has adopted One Cloud & Two Nets as the development strategy. As the carrier of intelligent technology and data application, CHINT Cloud fulfills corporate internal and external digital application and services. Relying on the Industrial Internet of Things (IIoT), CHINT builds its intelligent manufacturing system and practices intelligentized application of the electrical industry; relying on the Energy Internet of Things (EIoT), CHINT builds its smart energy system and explores the regional EIoT mode.

Focusing on energy supply, storage, transmission, allotment and consumption system, CHINT considers new energy, energy allotment, big data and energy value-added services as core businesses, with photovoltaic equipment, energy storage, power transmission and distribution, low-voltage apparatuses, intelligent terminals, software development and control automation as pillar businesses, to develop the platform enterprise and to build the regional smart energy comprehensive operation management ecosphere, ultimately, to provide the public institutions, industry & commerce and terminal users with a package of energy solutions.

Founded in 1984, CHINT has developed business network in over 140 countries and regions with more than 30,000 employees worldwide. CHINT has reached annual sales of 70 billion yuan in 2018, ranking among the top 50 Asian Listed Companies and the top 100 China Private Enterprises.

CHINT has actively explored overseas markets, has established 3 research and development (R&D) centers in Europe, North America and Asia Pacific, 6 global marketing areas and manufacturing bases in Thailand, Malaysia, Egypt, Singapore and Vietnam.

CHINT has stuck to the industrial development and innovation-driving concept, actively promoting the development of global R&D system. Till 2018, CHINT has won more than 4,000 patent licenses and 5,000 patent applications, on top of that, CHINT leaded the formulation of 185 industrial and national standards, and won 32 national and provincial science and technology awards.

CHINT has unswervingly adhered to people-oriented and value-sharing culture with the mission of "making the electric power even safer, green, convenient and efficient". CHINT builds its image of green, energy-saving, sustainable innovation, reliability comprehensiveness, and win-win cooperation with "customer-focused, innovation, humble learning, integrity, collaboration, responsibility" as core values, and "creating values for customers, seeking career development of employees and taking on responsibilities for the society" as operation concepts.

CHINT has positively taken on its social responsibilities. It has successively invested and set up "CHINT Moral Quality and Academic Excellent Scholarship for Chinese Middle School Students", "CHINT Education Fund for Impoverished Undergraduates of Zhejiang Province", and initiated the establishment of "China Red Ribbon Foundation". CHINT has invested 90million yuan to establish the "Commonweal Foundation of CHINT". So far CHINT has donated more than 300million yuan for social welfare undertakings such as education donation, earthquake resistance and disaster relief, social welfare entrepreneurship, ecological and environmental protection.

Through the technological innovation and remarkable contribution to the industry, CHINT has successively won honors and titles such as "China Grand Awards for Industry", "National Quality Management Award", "China Outstanding Private Scientific and Technological Enterprise", "Top 10 Enterprises with the most Core Competitiveness of China Machinery Industry" and "China Charity Award" and "China Charity Award", etc.

CHINT "One Cloud & Two Nets" Strategy

CHINT Cloud

The carrier of intelligent technology and data application in connecting enterprise internal manufacturing and business management data and fulfilling corporate internal and external digital application and services.

CHINT EIoT

A user-driven multi-energy complementary intelligent energy system, providing the public institutions, industry & commerce and terminal users with a package of energy solutions.

CHINT IIoT

An intelligent manufacturing system focusing on the enterprise digital transformation, building and developing a flexible, efficient and intelligent industrial system.

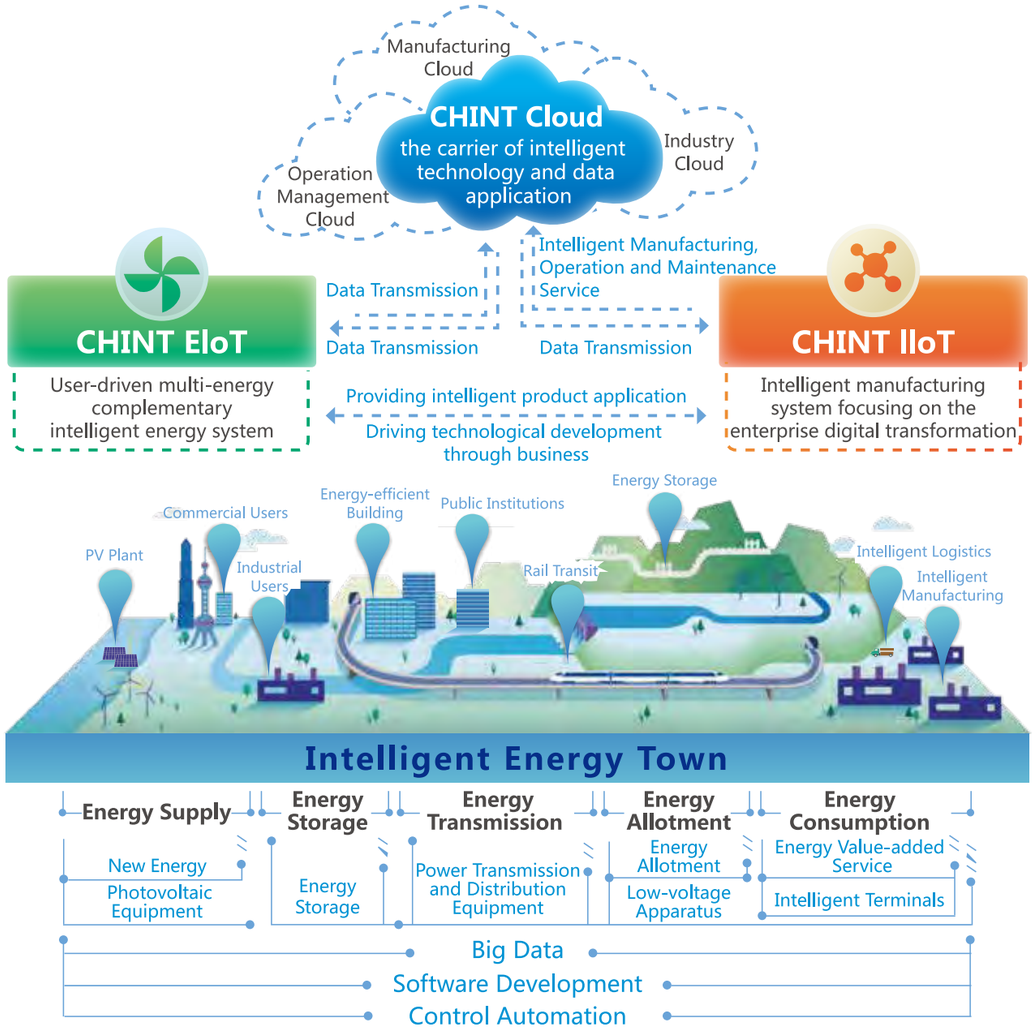

CHINT EIoT

A user-driven multi-energy complementary intelligent energy system, providing the public institutions, industry & commerce and terminal users with a package of energy solutions.

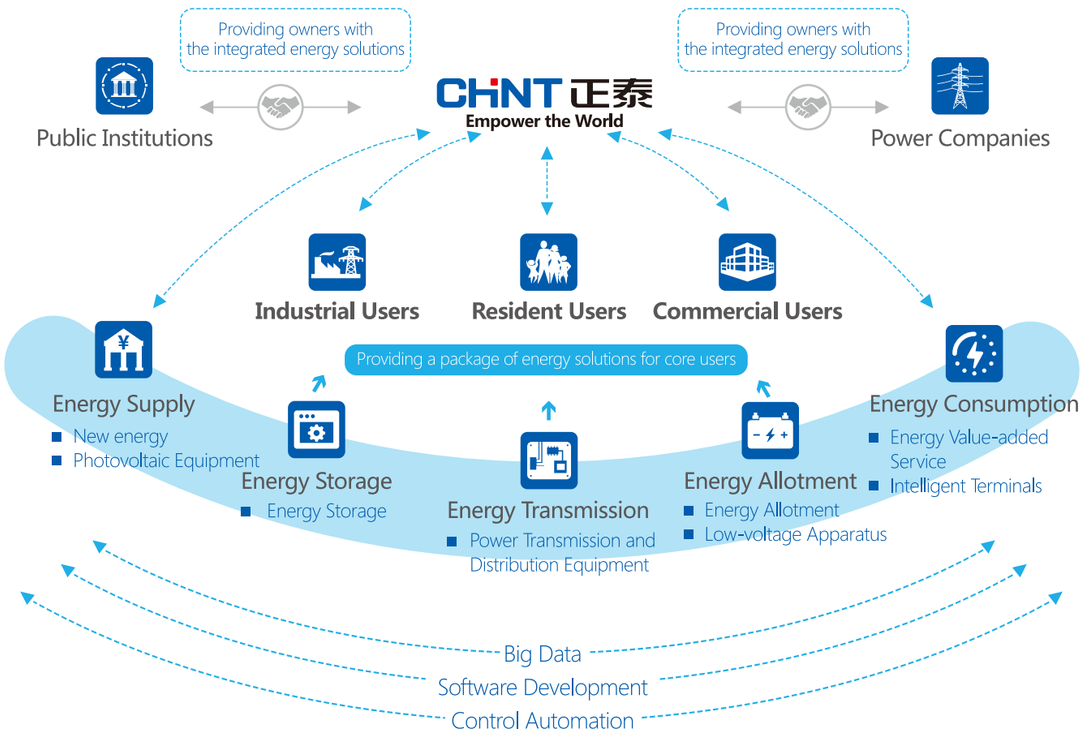

CHINT IIoT

Intelligent manufacturing system focusing on the enterprise digital transformation

- The first group of Sino-Germany Intelligent Manufacturing Cooperation Pilot Demonstration Projects made public by the Ministry of Industry and Information Technology
- "PV manufacturing+Internet" transparent factory opened up to the worldwide users
- One of 94 new intelligent manufacturing mode application projects made public in 2015
- Intelligent manufacturing integration system
- Big data full-process tracking
- Full-process automatic quality monitoring

The Thinking Factory
——in Hangzhou

The Transparent Internet Factory
—— in Haining

The Digital Electric Apparatus Plant
——in Wenzhou

Reliable quality, Best-selling Worldwide

3 global R&D centers :
Europe、North America、Asia Pacific

6 worldwide marketing areas :
Asia Pacific、Western Asia and Africa、Europe、Latin America、North America、China

13 manufacturing bases :
China (Wenzhou, Shanghai, Hangzhou, Jiaxing, Xianyang, Jiuquan, Jinan), Thailand, Egypt, Singapore, Vietnam, Malaysia, Algeria (production line)

20 overseas subsidiaries

16 marketing offices in China

32 international logistics centers

2300 sales companies

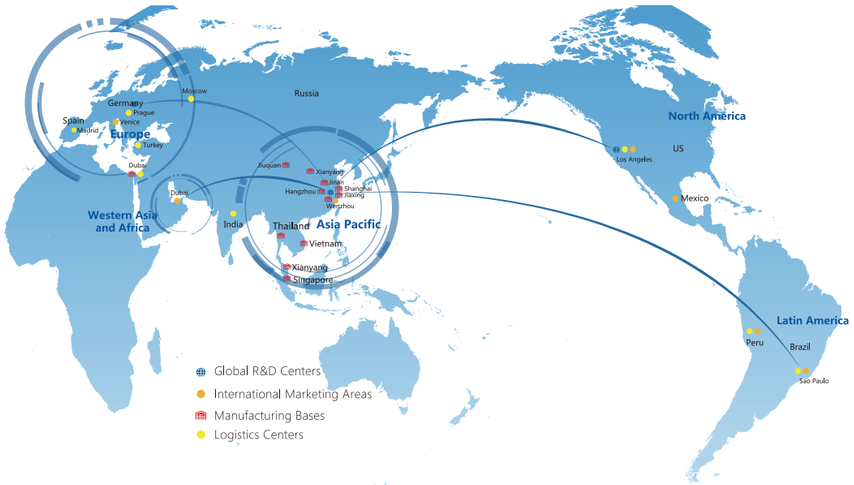

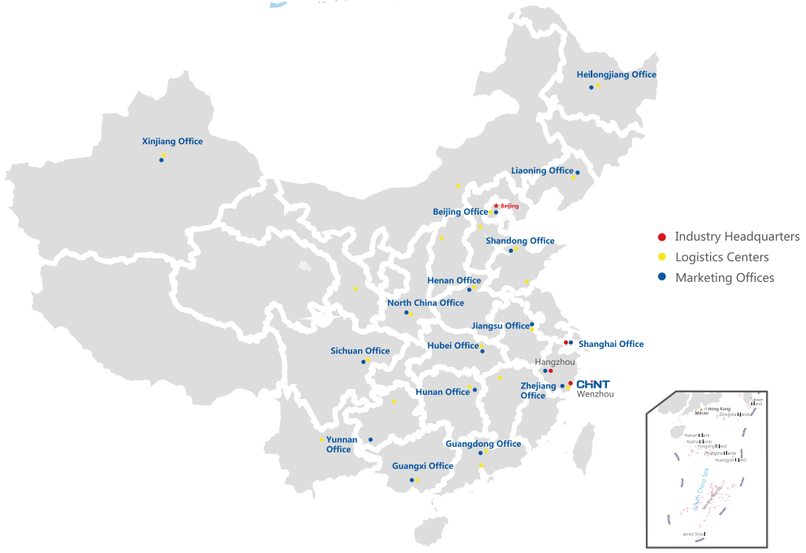

CHINT Honors

Comprehensive Strength

- 2015, top 100 enterprises in China machinery industry
- 2016, top 100 enterprises of Zhejiang Province
- 2017, ranking the 85th place among top 500 China private enterprises
- 2017, innovative leading enterprise of Zhejiang Province
- 2017, top 100 enterprises in innovation capacity among the national hi-tech enterprises of Zhejiang Province

Quality Management

- 2016, advanced unit and user-satisfied enterprise in national user satisfaction project
- 2016, executive director unit of Asia Quality Function Development Association
- 2017, quality good faith enterprise of China machinery industry
- 2017, national product and service quality good faith demonstration enterprise

Independent Innovation

- 2015, Science and Technology Award of China Electrotechnical Society
- 2016, Golden Patent Prize of Zhejiang Province and Patent Recognition Award of Zhejiang Province for two serial products
- 2016, national intellectual property demonstration enterprise
- 2016, group member of China Intellectual Property Society
- 2016, member of Global Energy Interconnection Development and Cooperation Organization

Social Responsibilities

- 2014, five-star enterprise of China industry sector in performing social responsibilities
- 2016, National Enterprise of Observing Contract and Valuing Credit
- 2017, credit management demonstration enterprise of Zhejiang Province
- 2018, the 10th "China Charity Award" of the Ministry of Civil Affairs

Qualification Certification

The products have been accredited through China Compulsory Certification (CCC) as well as UL of US, CE of EU, VDE and TÜV of Germany, EAC of Russia, KEMA of Netherlands, RCM of Australia, RCC of South Africa and other international product certifications.

Craftsmanship Forges High-quality Products

Craftsmanship Forges High-quality Products

CHINT Electrics, a core controlled company belonging to CHINT Group, it focuses on R&D, design, manufacturing and sales of low-voltage apparatus products and provides system solutions for building, power supply, hoisting, HVAC, telecommunication and other industrial customers. For over 30 years since its founding, CHINT has provided reliable products and services for over 140 countries and regions, and has become one of world famous low-voltage apparatus brand operators.

CHINT will continuously satisfy the increasing market demand through technical and innovative services advancing with the times, and will provide safer, more reliable products and create more secure and comfortable living environment.

CHINT KUNLUN SERIES

Air Circuit Breaker

- Built-in busbar temperature sensor ;
- Fine shell-frame division ;
- Man-machine interconnection ;
- Strong environmental adaptability.

Moulded Case Circuit Breaker

- Fine shell-frame division ;
- Line protection ;
- Double insulation ;
- Man-machine interconnection ;
- Strong environmental adaptability.

Terminal Distribution Apparatus

- Clear contact window ;
- Small size and high current ;
- More current specification options ;
- Abundant accessories ;
- Strong environmental adaptability.

Motor Control and Protection

- Suitable for large voltage fluctuation ;
- Humane design ;
- Fine current specification ;
- More standard auxiliary contacts ;
- Strong environmental adaptability.

NA1 Air Circuit Breaker

NA1

NA1-1000X
200A to 1000A

NA1-2000X,NA1-2000XN, NA1-2000XH
630A to 2000A

NA1-3200X,NA1-3200XN,NA1-4000X
2000A to 4000A

NA1-6300X,NA1-6300XN
4000A to 6300A

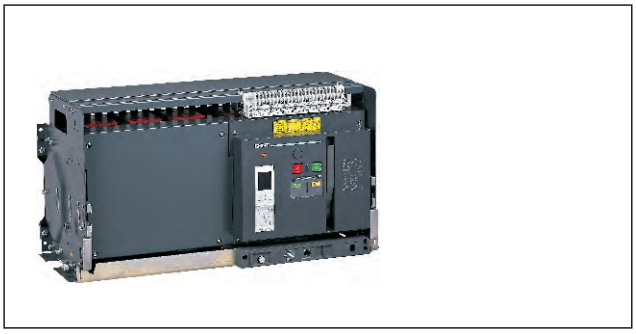

Summary

5 basic frame sizes

For your various requirements, the Air Circuit Breaker NA1 includes 5 basic frame sizes as followed.

CE KEMA EUR EAC RCC

1. General

1.1 Application scope

NA1 series air circuit breaker is suitable for the circuit of AC 50Hz/60Hz with rated service voltage 400V, 690V and rated service current up to 6300A. It is mainly used to distribute electric energy and protect circuits and electric equipment against over-load, under-voltage, short-circuit and single-phase earthing fault.

With intelligentized and selective protection functions, the breaker can improve the reliability of power supply, and avoid unnecessary power failure. The breaker is applicable for power stations, factories, mines (for 690V) and modern high-buildings, especially for the distribution system of intelligentized building.

1.2 Standard: IEC/EN 60947-2.

2. Operating conditions

2.1 Temperature condition:

-5℃~40℃; the average value within 24h shall not exceed +35℃ (special situation excluded);

2.2 Altitude:≤2000m;

2.3 Pollution grade: Grade 3;

2.4 Air conditions:

At mounting site, relative humidity not exceed 50% at the max temperature of +40℃, higher relative humidity is allowable under lower temperature, RH could be 90% at +20℃, special measures should be taken to occurrence of dews;

2.5 Note: Without the intelligent controller, the breaker functions as a switch-disconnector.

2.6 Type designation

NA1 - □□-□□/□-□-□-□-□

- Voltage of secondary circuit
  AC220V, AC380V,
  AC230V, AC400V
  DC220V, DC110V
- Wiring of main circuit:
  H:Horizontal wiring of main circuit
  V:Vertical wiring of main circuit
- Mode of installation:
  F:Fixed type
  D:Draweout type
- Mode of operation:
  M:Manual
  P: Power-driven
- No. of poles:
  3:3-pole
  4:4-pole
- Intelligent controller:
  M: Standard type
  3M: Multifunctional type
  3H: Communication type
- Rated current:

Frame size rated current	Rated current
1000A	200A
	400A
	630A
	800A
	1000A
2000A	630A
	800A
	1000A
	1250A
	1600A
	2000A
3200A	2000A
	2500A
	3200A
4000A	4000A
6300A	4000A
	5000A
	6300A

- Breaking capacity:
  X
  XN
  XH
- Frame size rated current:
  1000,2000,3200,4000,6300
- Design sequence number
- ACB
- Company code

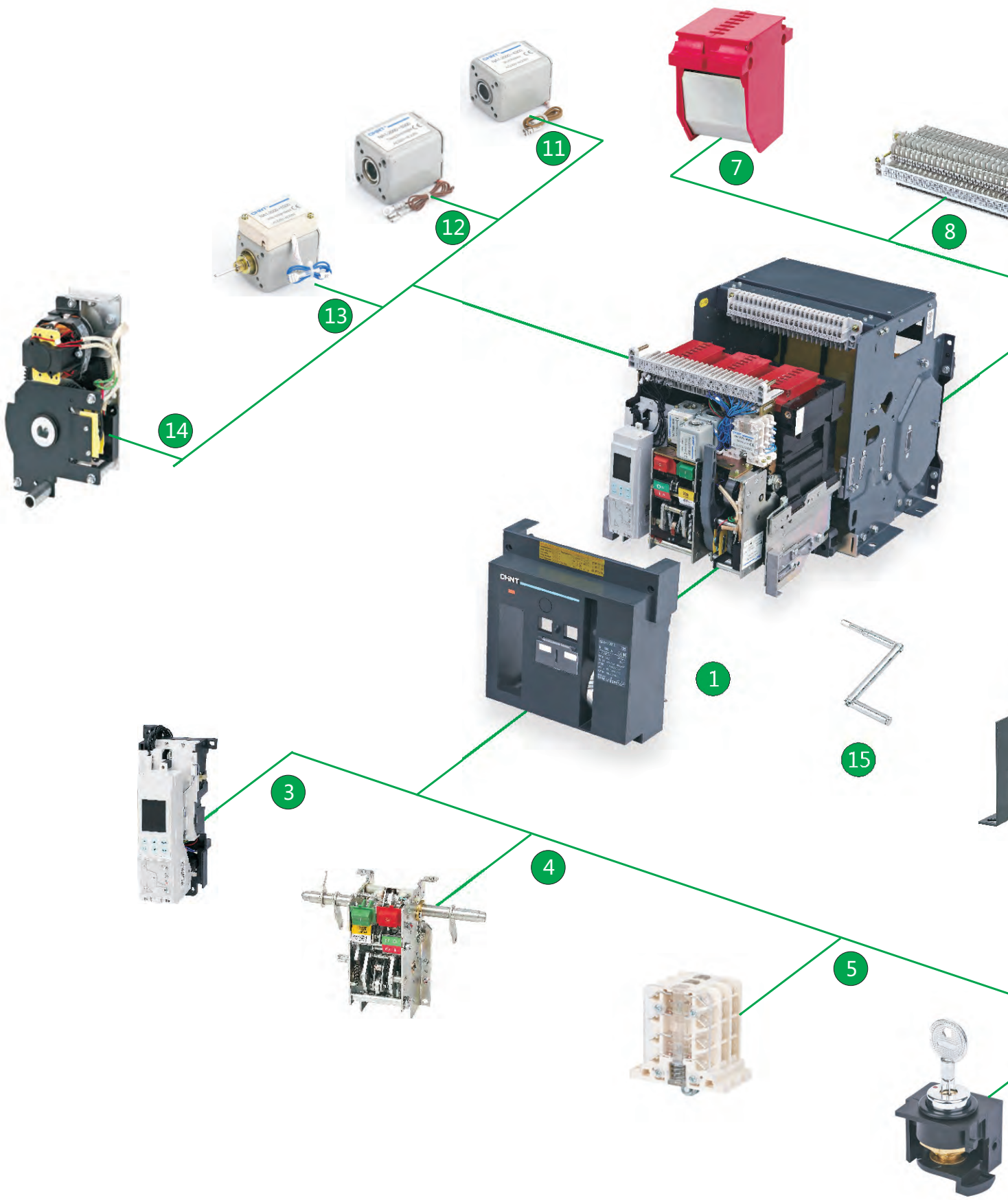
1
3
4
5
7
8
11
12
13
14
15

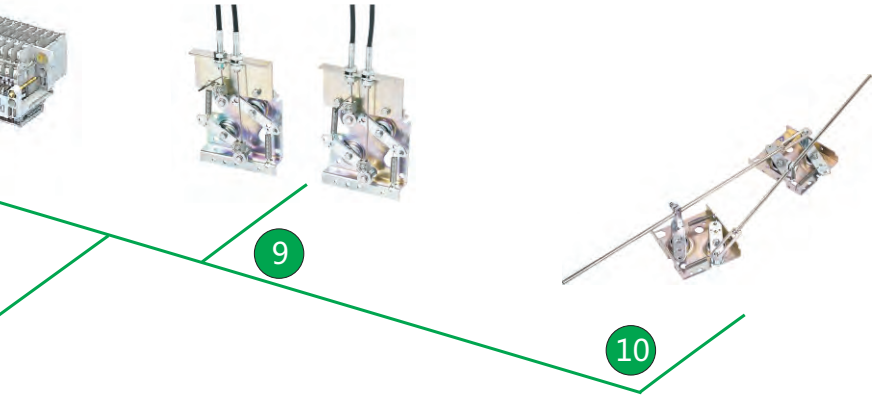

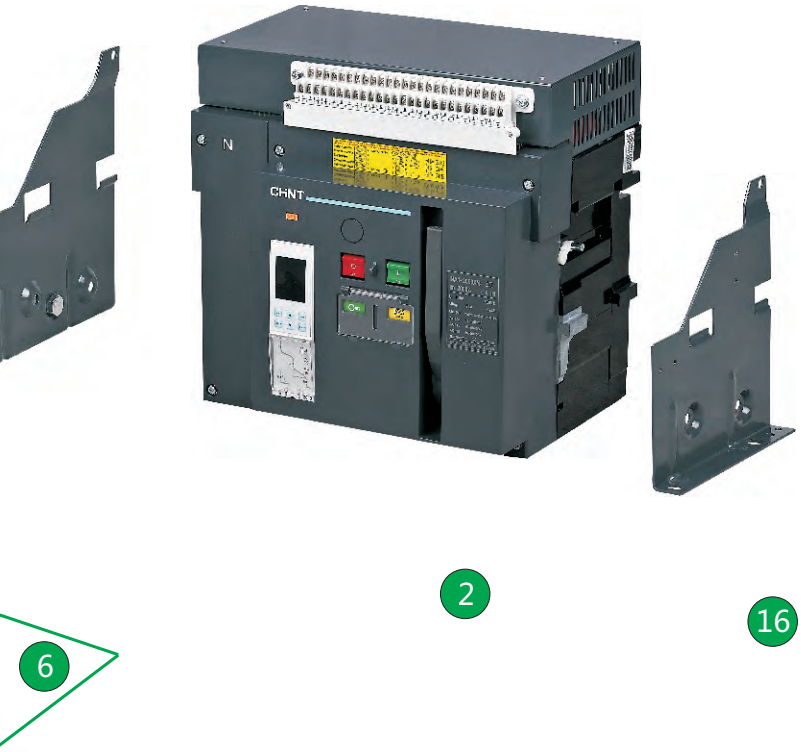

NA1 Air Circuit Breaker

1. Drawout type
2. Fixed type
3. Intelligent controller
4. Operating mechanism
5. Auxiliary contact
6. Locking-device
7. Arcing chamber
8. Secondary wiring terminal
9. Wire-cable mechanical interlock
10. Connecting-rod type mechanical interlock
11. Shunt release
12. Closing electromagnet
13. Under-voltage release
14. Motor-driven energy-storage mechanism
15. Rotary handle
16. Mounting plate

3. Structure

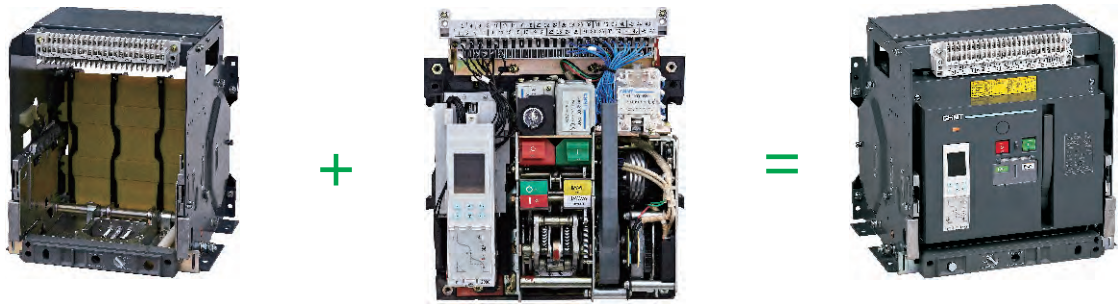

Drawer seat + Body = Drawout type breaker/switch-disconnector

Mounting plate → Mounting plate for the fixed type breaker/switch-disconnector ← Mounting plate

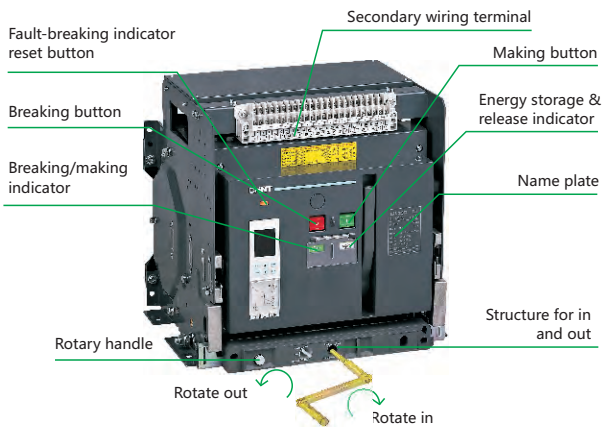

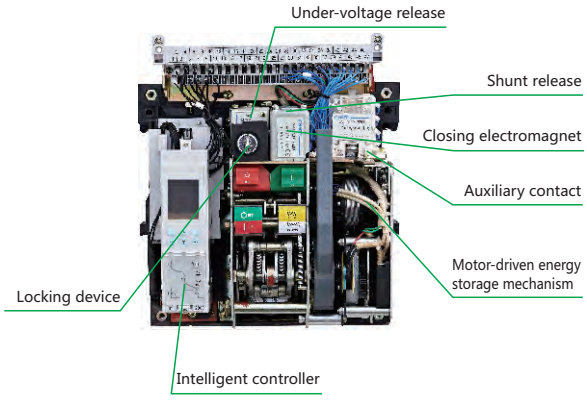

4. Main technical parameter

Type		NA1-1000X				
						
Rated ultimate short circuit breaking capacity (Icu)	AC400V	42				
	AC690V	25				
Rated service short circuit breaking capacity (Ics)	AC400V	30				
	AC690V	20				
Rated short-time withstand current (Icw.1s)	AC400V	30				
	AC690V	20				
Rated current In (A)		200	400	630	800	1000
Number of poles		3, 4				
Rated voltage Ue (V)		AC 400, AC 690				
Rated insulation voltage Ui (V)		800				
Rated current of N-pole In (A)		100%In				
Fixed disconnection time (ms)		23~32				
Intelligent controller	Standard type (M)	●	●	●	●	●
	Communication type (H)	●	●	●	●	●
Operation performance	Electric life	AC 400V:6500, AC 690V:3000				
	Mechanical life	Non-maintenance 15,000				
		Maintenance 30,000				
Connection pattern		Horizontal, Vertical				
Motor operational standard configuration weight (kg)	Drawout 3P/4P	38/55				
	Fixed 3P/4P	22/26.5				

Type		NA1-2000X			NA1-2000XN		NA1-2000XH
							
Rated ultimate short circuit breaking capacity (Icu)	AC400V	80			50		65
	AC415V	50			40		50
	AC690V	50			40		50
Rated service short circuit breaking capacity (Ics)	AC400V	65			50		65
	AC415V	40			40		40
	AC690V	40			40		40
Rated short-time withstand (Icw.1s)	AC400V	50			50		50
	AC415V	40			40		40
	AC690V	40			40		40
Rated short-time withstand (Icw.3s)	AC400V	42			42		42
	AC415V	42			42		42
Rated current In (A)		630	800	1000	1250	1600	2000
Number of poles		3, 4					
Rated voltage Ue (V)		AC400, AC415, AC690					
Rated insulation voltage Ui (V)		1000					
Rated current of N-pole In (A)		100%In					
Fixed disconnection time (ms)		23~32					
Intelligent controller	Standard type (M)	●	●	●	●	●	●
	Communication type (H)	●	●	●	●	●	●
Operation performance	Electric life	AC400:6500 AC690V:3000					
	Mechanical life	Non-maintenance 15,000					
		Maintenance 30,000					
Connection pattern		Horizontal, Vertical					
Motor operational standard configuration weight (kg)	Drawout 3P/4P	67.5 / 80			70 / 84		79 / 90.5
	Fixed 3P/4P	42 / 52			44 / 52		45 / 54

Type		NA1-3200X		NA1-3200XN	NA1-4000X
					
Rated ultimate short circuit breaking capacity (Icu)	AC400V	80		65	80
	AC415V	65		50	—
	AC690V	65		50	65
Rated service short circuit breaking capacity (Ics)	AC400V	65		65	65
	AC415V	65		50	—
	AC690V	65		50	65
Rated short-time withstand (Icw.1s)	AC400V	65		65	65
	AC415V	50		50	—
	AC690V	50		50	50
Rated short-time withstand (Icw.3s)	AC400V	45		45	—
	AC415V	45		45	—
Rated current I_n (A)		2000	2500	3200	4000
Number of poles		3, 4			3
Rated voltage Ue (V)		AC400, AC415, AC690			
Rated insulation voltage Ui (V)		1000			
Rated current of N-pole I_n (A)		100%In			
Fixed disconnection time (ms)		23~32			
Intelligent controller	Standard type (M)	●	●	●	●
	Communication type (H)	●	●	●	●
Operation performance	Electric life	AC400V:3000 AC690V:2000			AC400V:1500 AC690V:1000
	Mechanical life	Non-maintenance 10,000			
		Maintenance 20,000			
Connection pattern		Horizontal, Vertical			
Motor operational standard configuration weight (kg)	Drawout 3P/4P	90.5 / 116	90.5 / 116	103 / 130	132
	Fixed 3P/4P	55 / 68	55 / 68	56.5 / 71	72 / -

Type		NA1-6300X		NA1-6300XN
				
Rated ultimate short circuit breaking capacity (Icu)	AC400V	120		100
	AC415V	85		75
	AC690V	85		75
Rated service short circuit breaking capacity (Ics)	AC400V	100		100
	AC415V	75		75
	AC690V	75		75
Rated short-time withstand (Icw.1s)	AC400V	100		100
	AC415V	75		75
	AC690V	75		75
Rated short-time withstand (Icw.3s)	AC400V	50		50
	AC415V	50		50
rated current In (A)		4000	5000	6300
Number of poles		3, 4		3
Rated voltage Ue (V)		AC400, AC415,AC690		
Rated insulation voltage Ui (V)		1000		
Rated current of N-pole In (A)		50%In		—
Fixed disconnection time (ms)		23~32		
Intelligent controller	Standard type (M)	●	●	●
	Communication type (H)	●	●	●
Operation performance	Electric life	AC400V:1500 AC690V:1000		
	Mechanical life	Non-maintenance 5000		
		Maintenance 10,000		
Connection pattern		Horizontal, Vertical		
Motor operational standard configuration weight (kg)	Drawout 3P/4P	210 / 233	210 / 233	233 / -
	Fixed 3P/4P	- / -	- / -	- / -

Standard configuration: M type intelligent controller; Under-voltage release; Shunt release; Motor-driven energy-storage mechanism; Closeing electromagnet.

5. Dimensions and connection

NA1-1000X Drawout-type

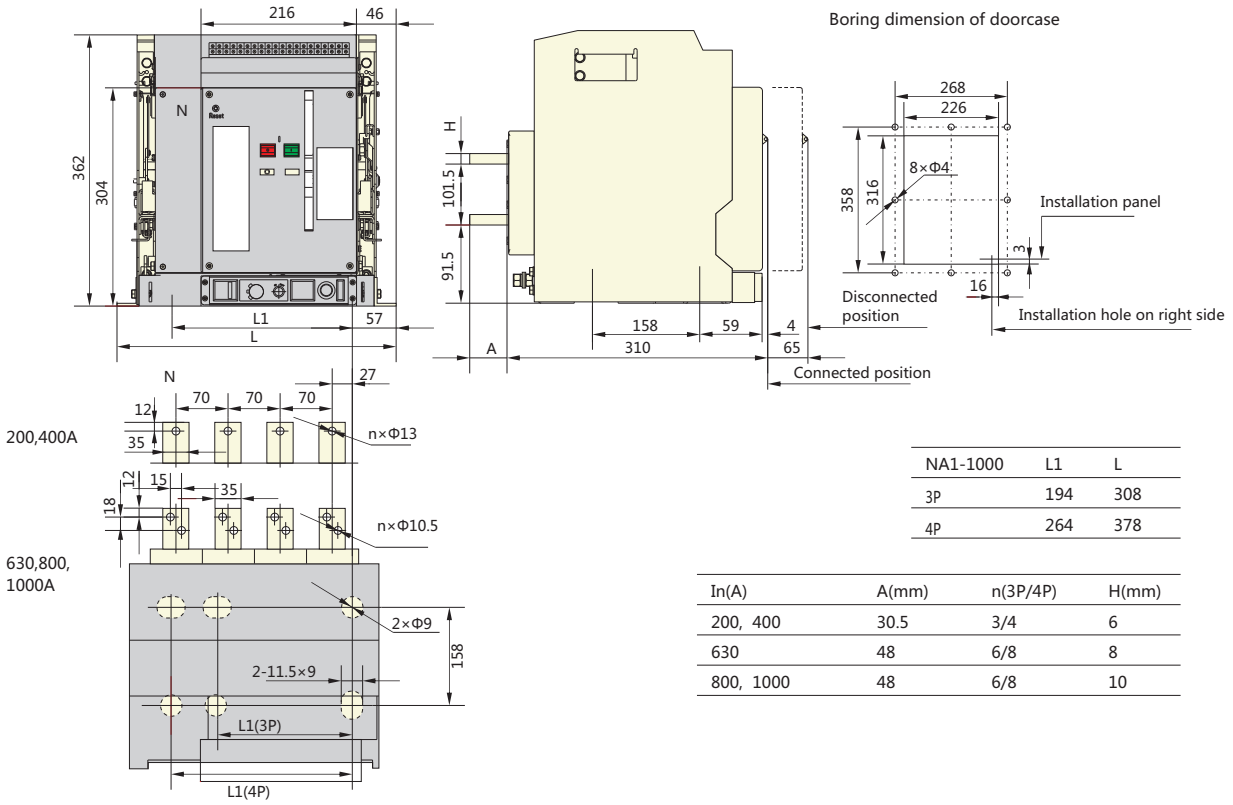

NA1-1000	L1	L
3P	194	308
4P	264	378

In(A)	A(mm)	n(3P/4P)	H(mm)
200, 400	30.5	3/4	6
630	48	6/8	8
800, 1000	48	6/8	10

NA1-1000X Fixed-type

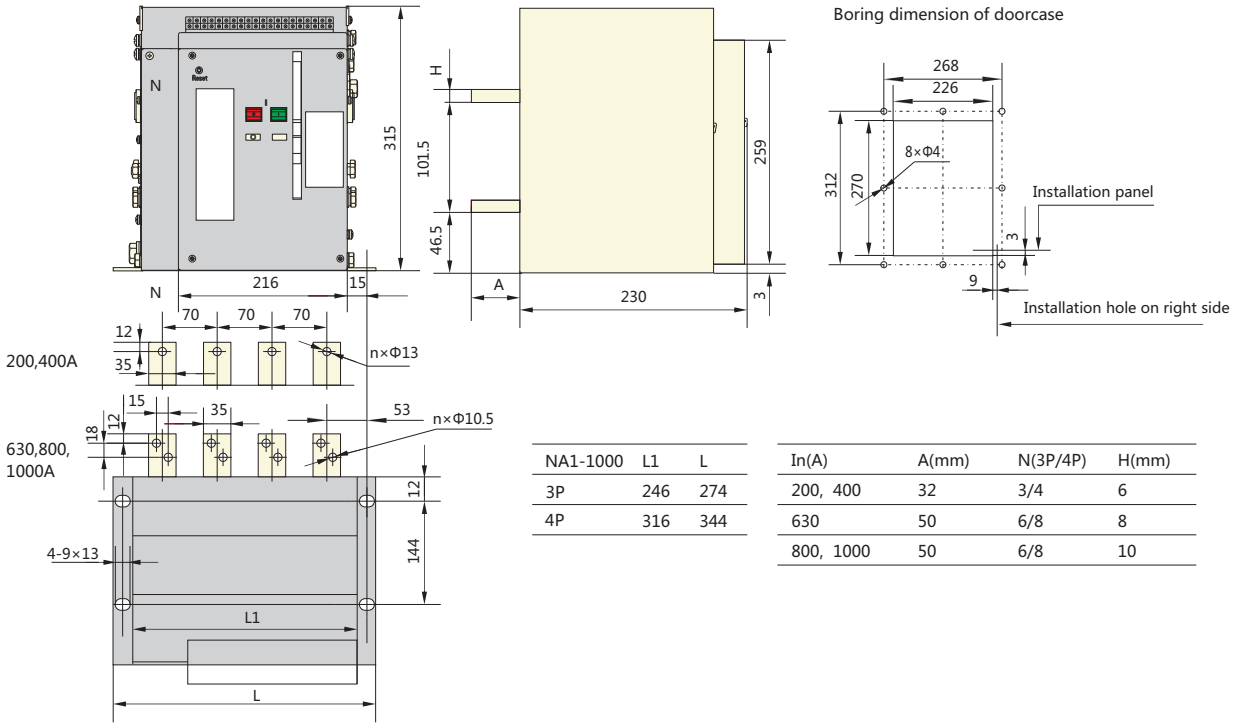

NA1-1000	L1	L
3P	246	274
4P	316	344

In(A)	A(mm)	N(3P/4P)	H(mm)
200, 400	32	3/4	6
630	50	6/8	8
800, 1000	50	6/8	10

NA1-2000X/NA1-2000XN/NA1-2000XH Drawout-type

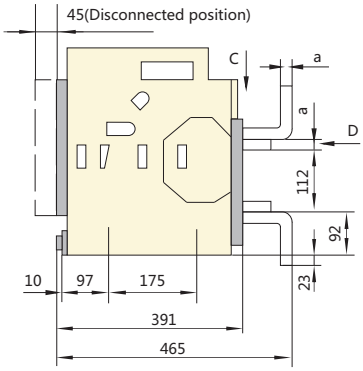

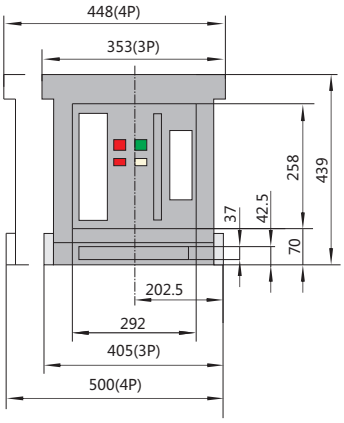

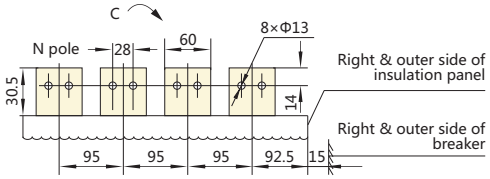

horizontal connection(Default Configuration)

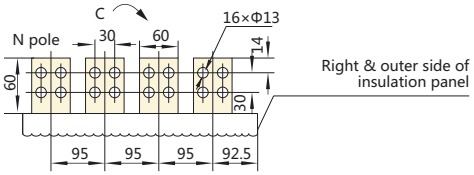

horizontal connection Lengthen busbar

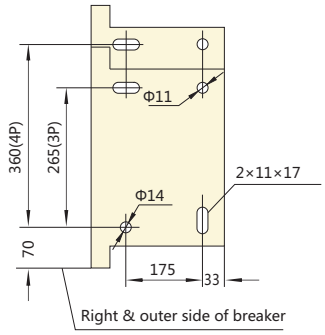

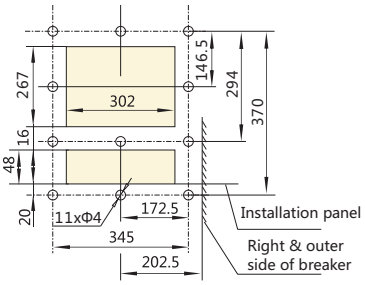

Opening hole on panel

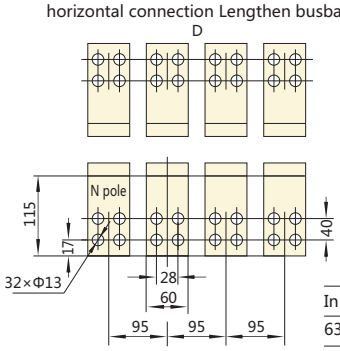

L type vertical connection

In A	a mm
630	10
800~1600	15
2000	20

NA1-2000X/NA1-2000XN/NA1-2000XH Drawout-type,vertical,rear connection

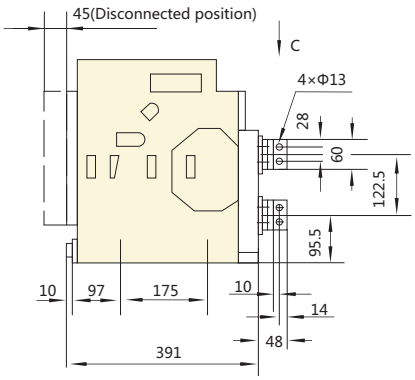

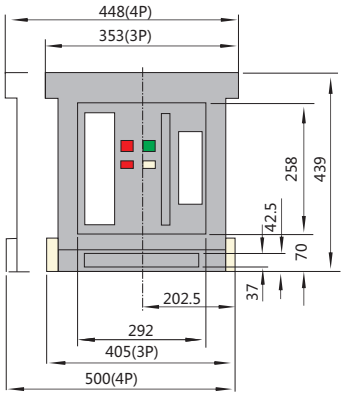

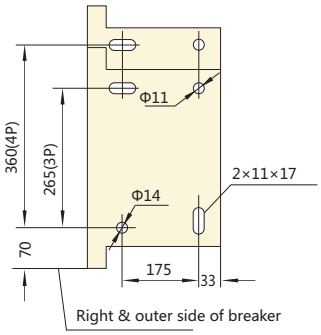

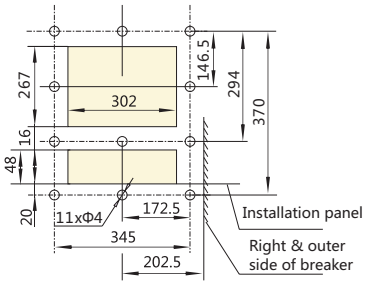

Opening hole on panel

In A	a mm
630	10
800~1600	15
2000	20

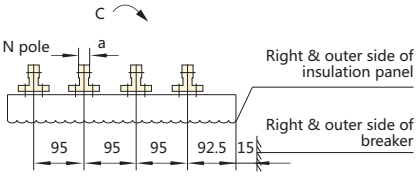

NA1-2000X/NA1-2000XN/NA1-2000XH Drawout-type, horizontal, rear connection

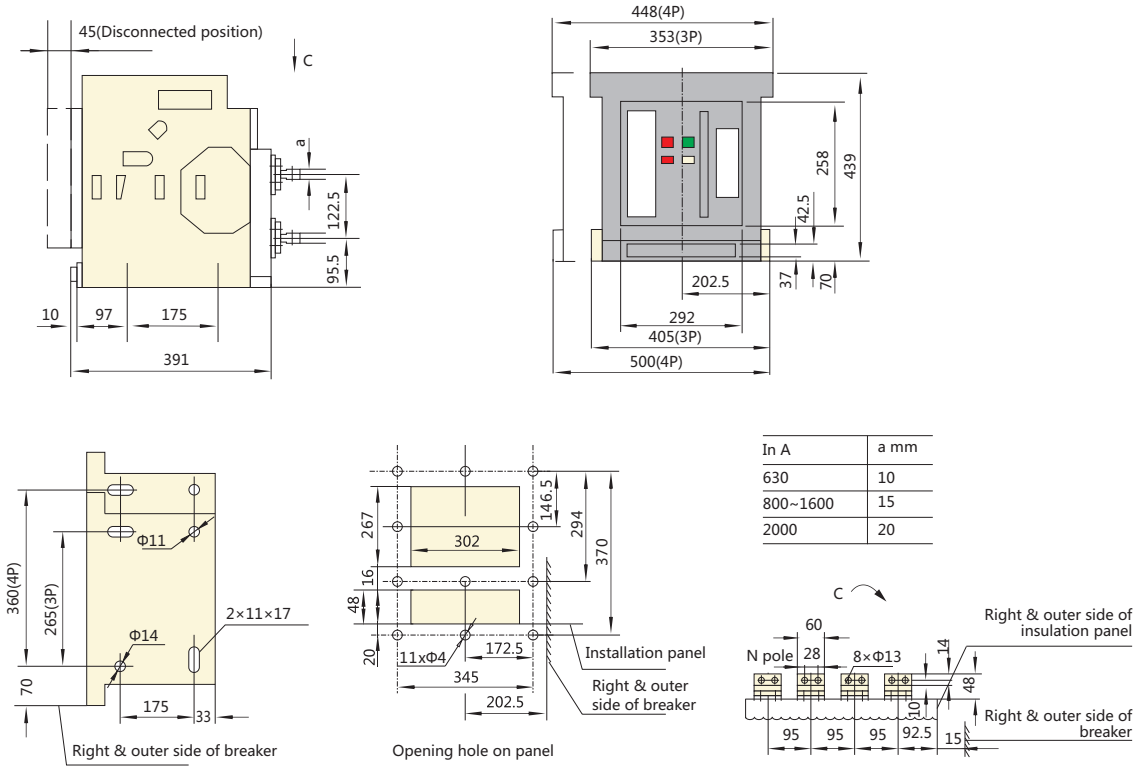

In A	a mm
630	10
800~1600	15
2000	20

NA1-2000X/NA1-2000XN/NA1-2000XH Fixed-type

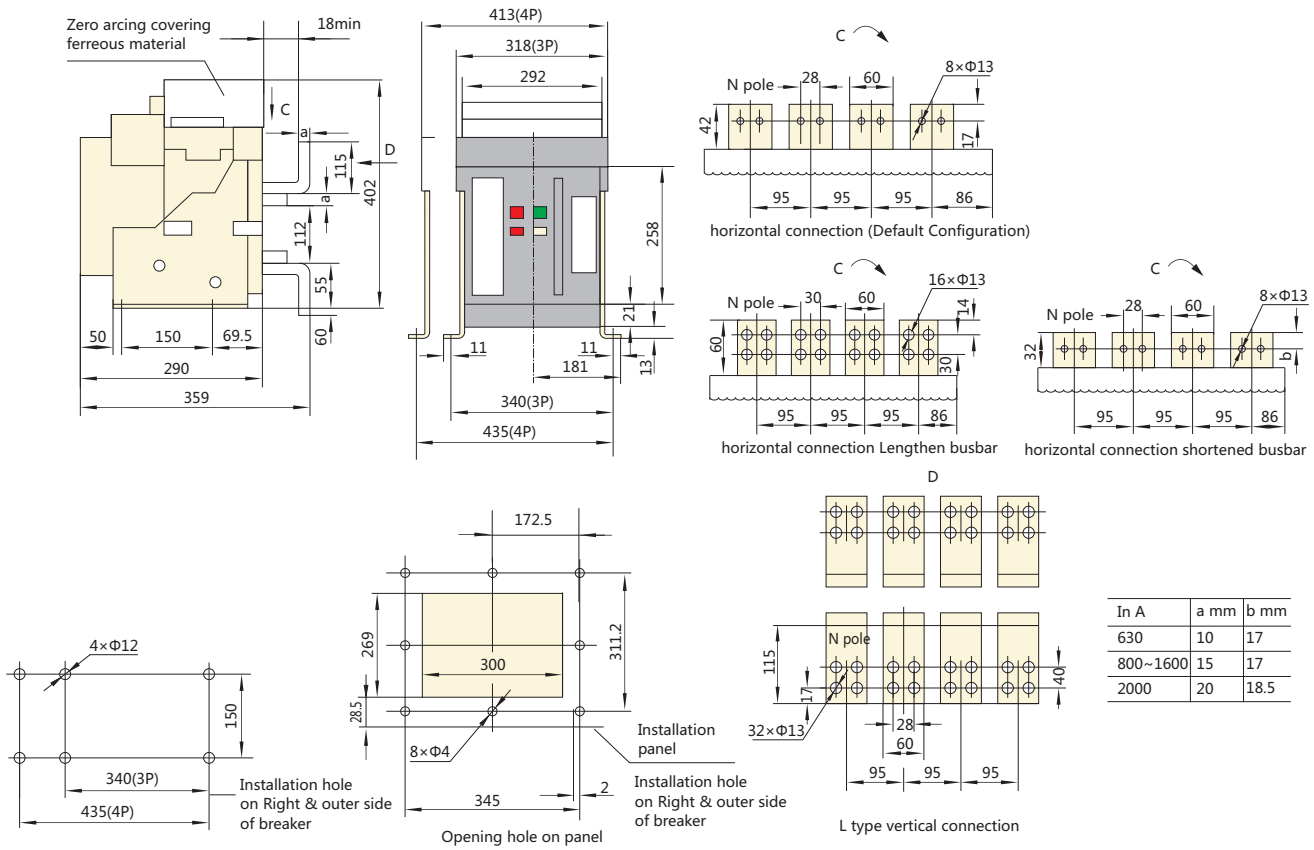

In A	a mm	b mm
630	10	17
800~1600	15	17
2000	20	18.5

NA1-3200X/NA1-3200XN Drawout-type

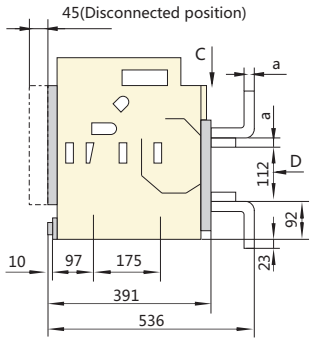

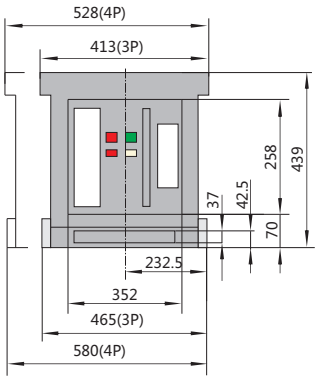

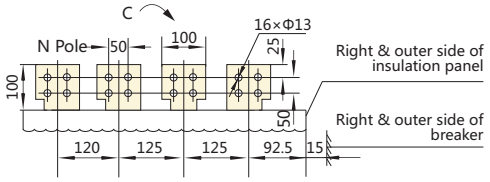

horizontal connection(Default Configuration)

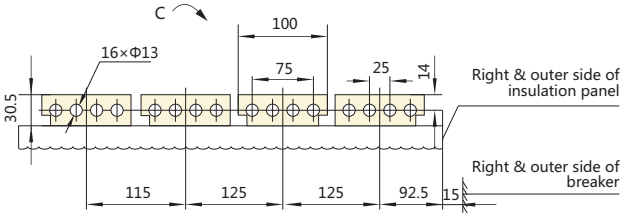

horizontal connection shorten busbar

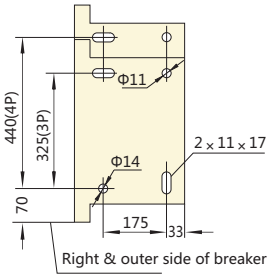

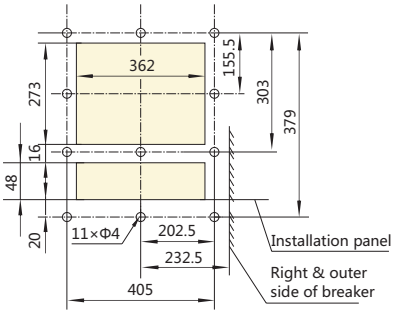

Opening hole on panel

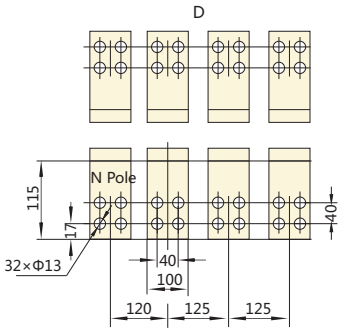

L type vertical connection

In A	a mm
2000~2500	20
3200	30

NA1-3200X/NA1-3200XN Drawout-type, horizontal, rear connection

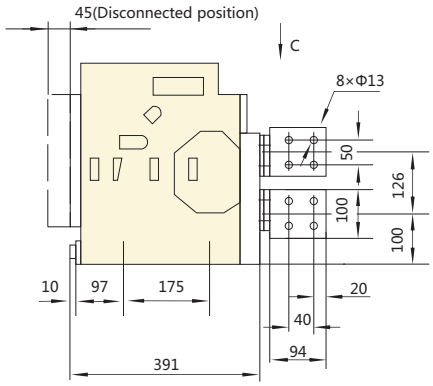

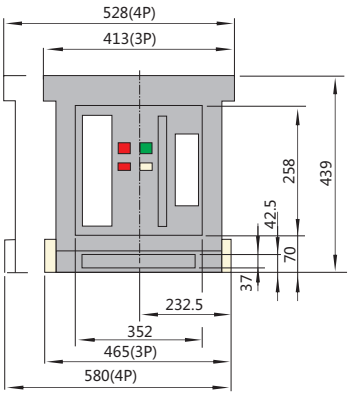

In A	a mm
2000~2500	20
3200	30

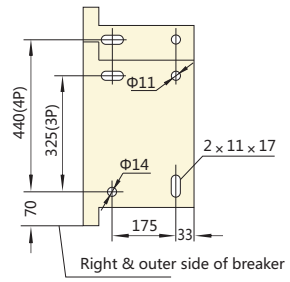

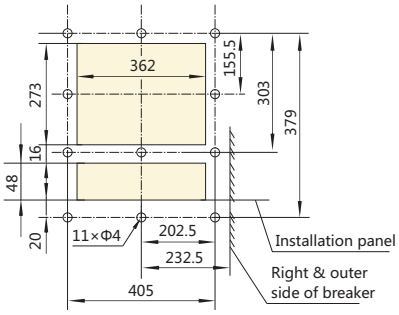

Opening hole on panel

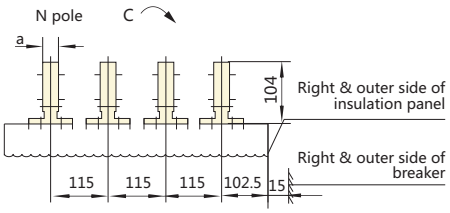

NA1-3200X/NA1-3200XN Drawout-type, horizontal, rear connection

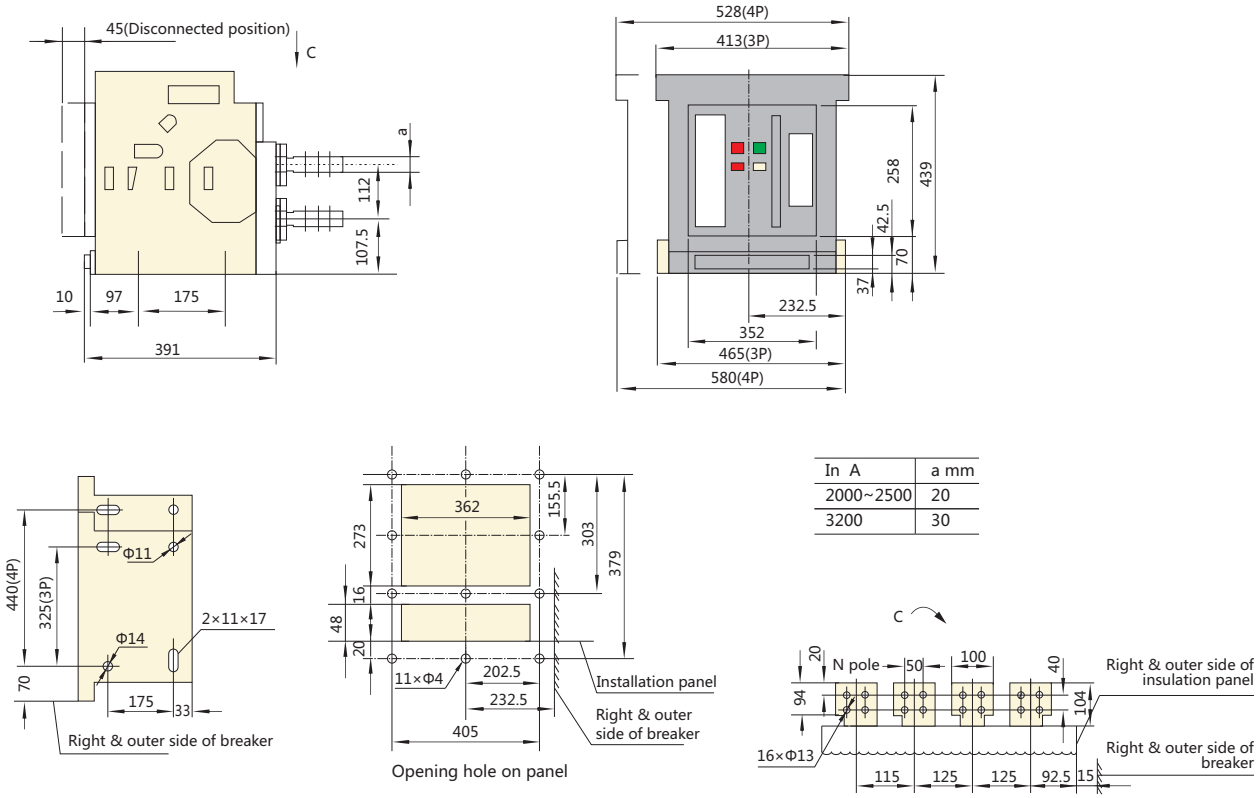

In A	a mm
2000~2500	20
3200	30

NA1-3200X/NA1-3200XN Fixed-type

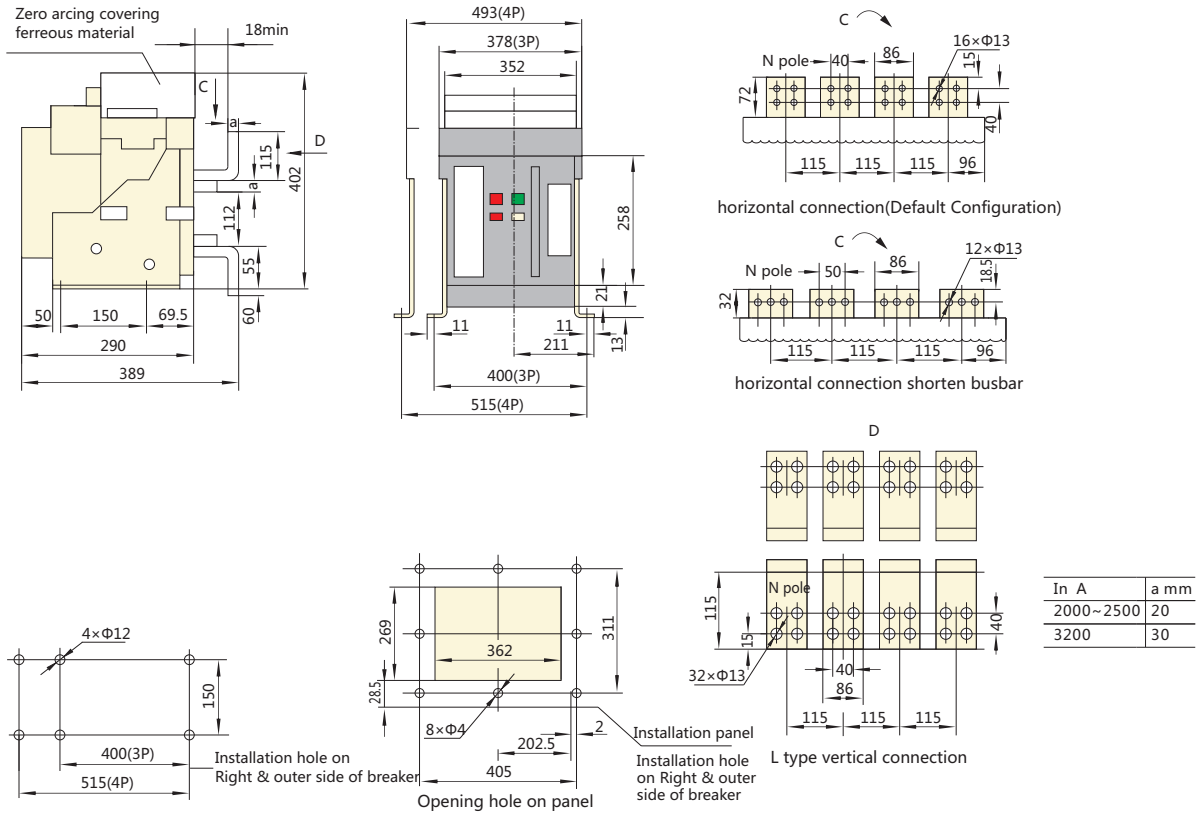

In A	a mm
2000~2500	20
3200	30

NA1-4000X Fixed-type (3P)

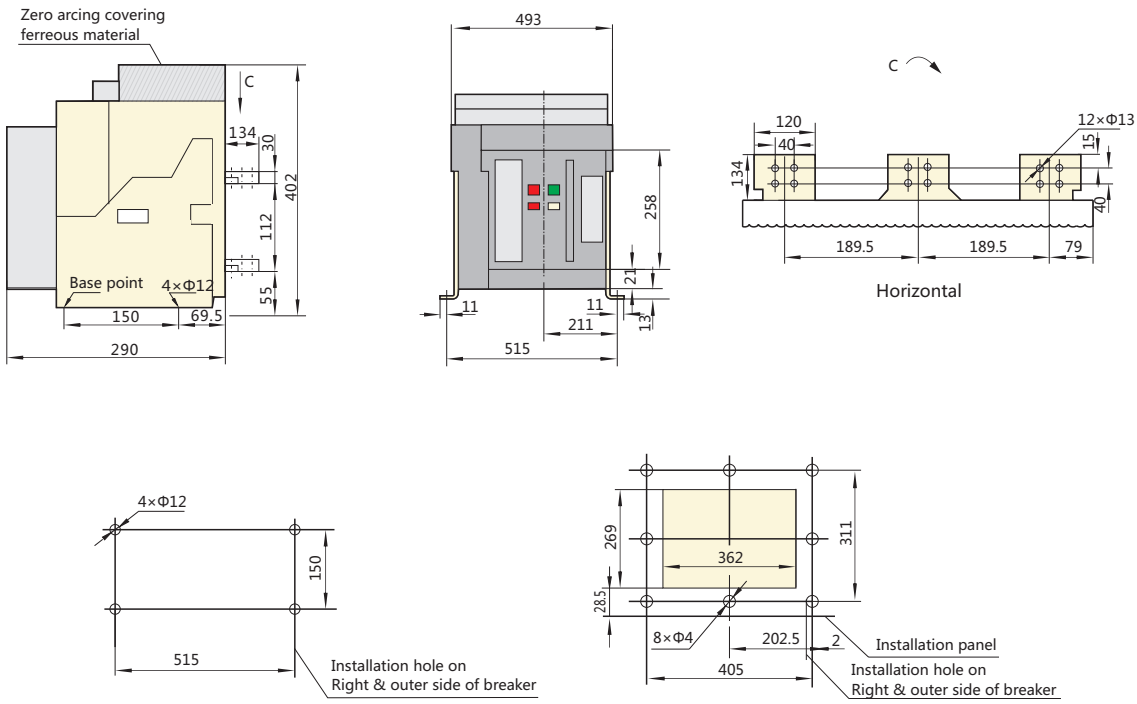

NA1-4000X Drawout-type (3P)

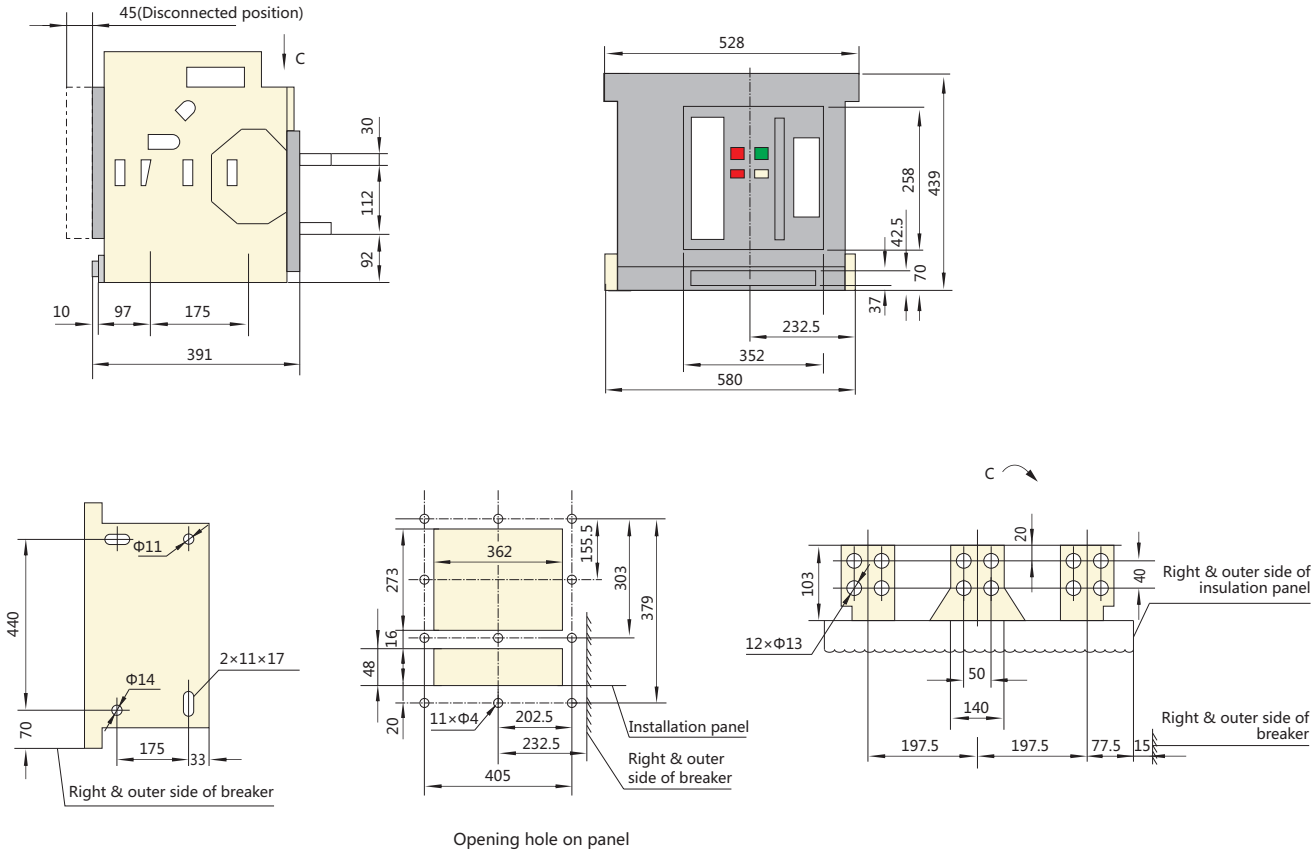

NA1-6300X/NA1-6300XN (In=4000A,5000A) Drawout-type

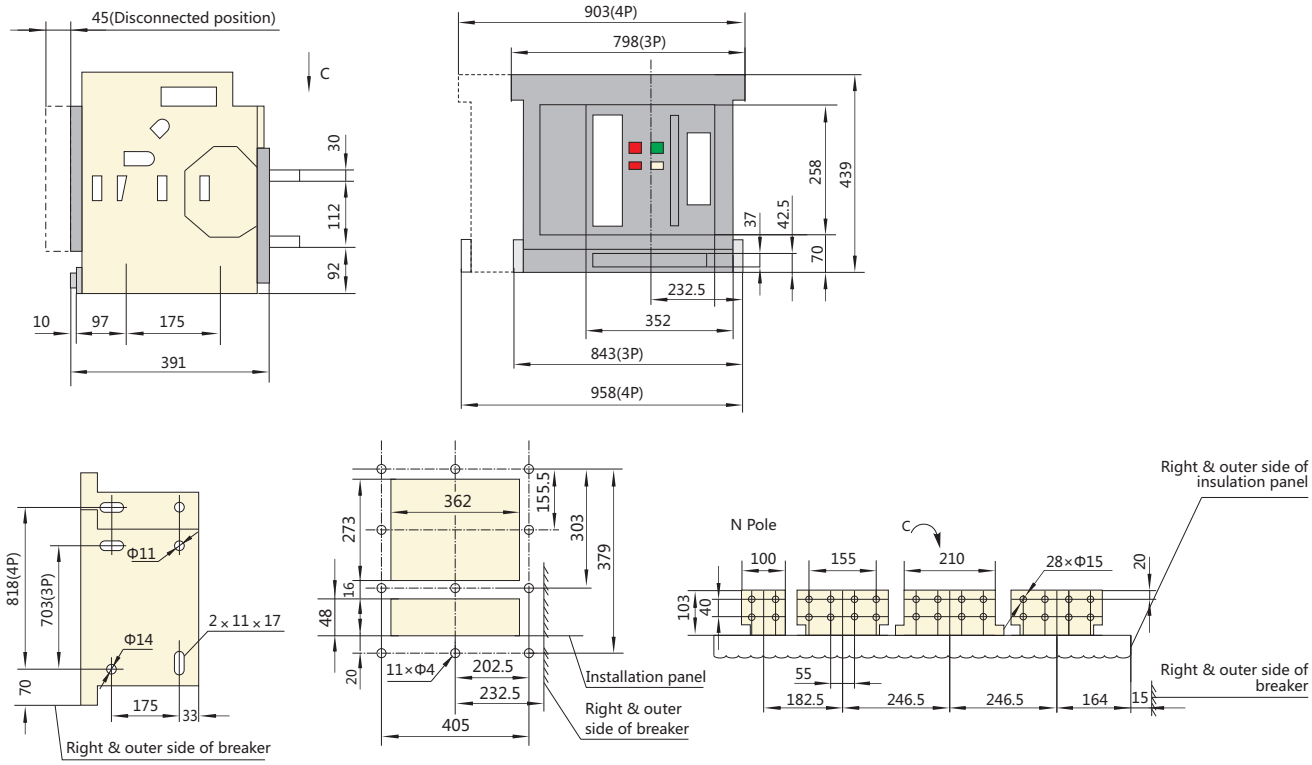

Opening hole on panel

NA1-6300X/NA1-6300XN (In=6300A) Drawout-type (3P)

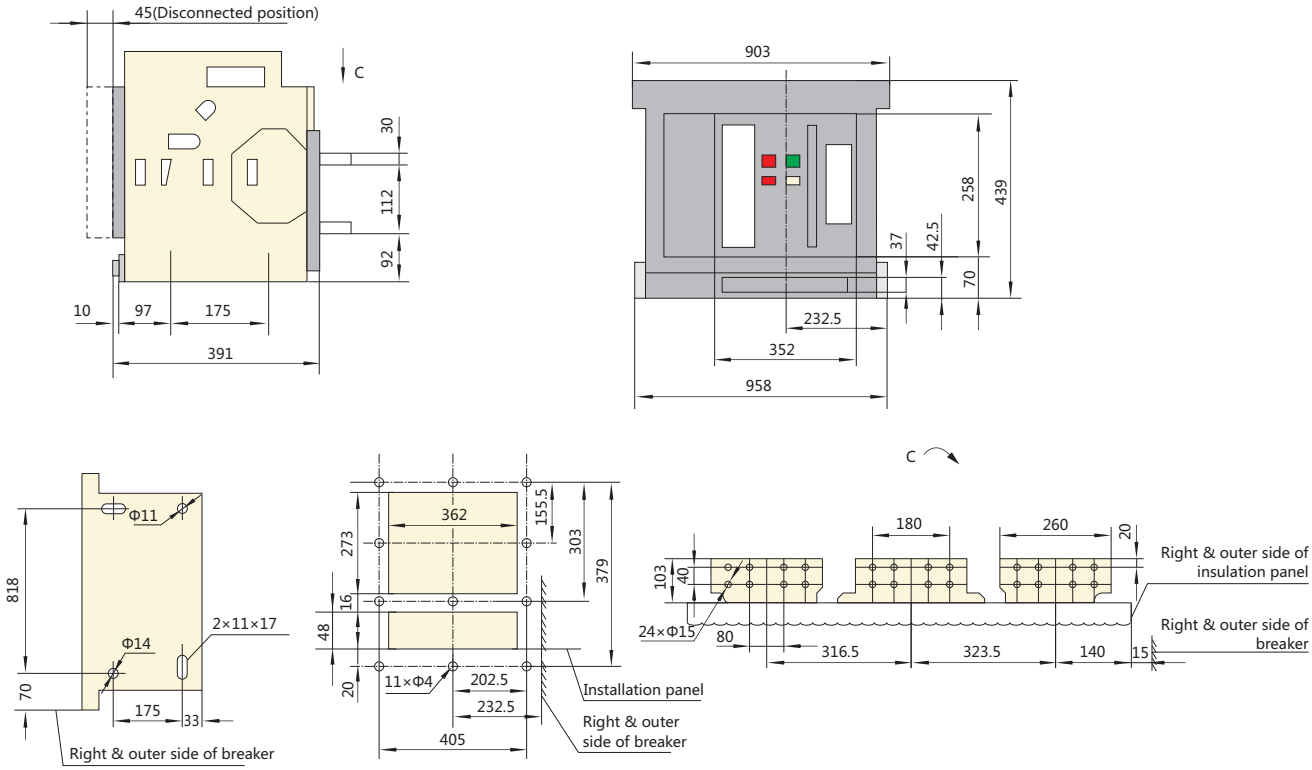

Opening hole on panel

6. Secondary circuit wiring

6.1 NA1-1000X

Standard type, type (M/3M)

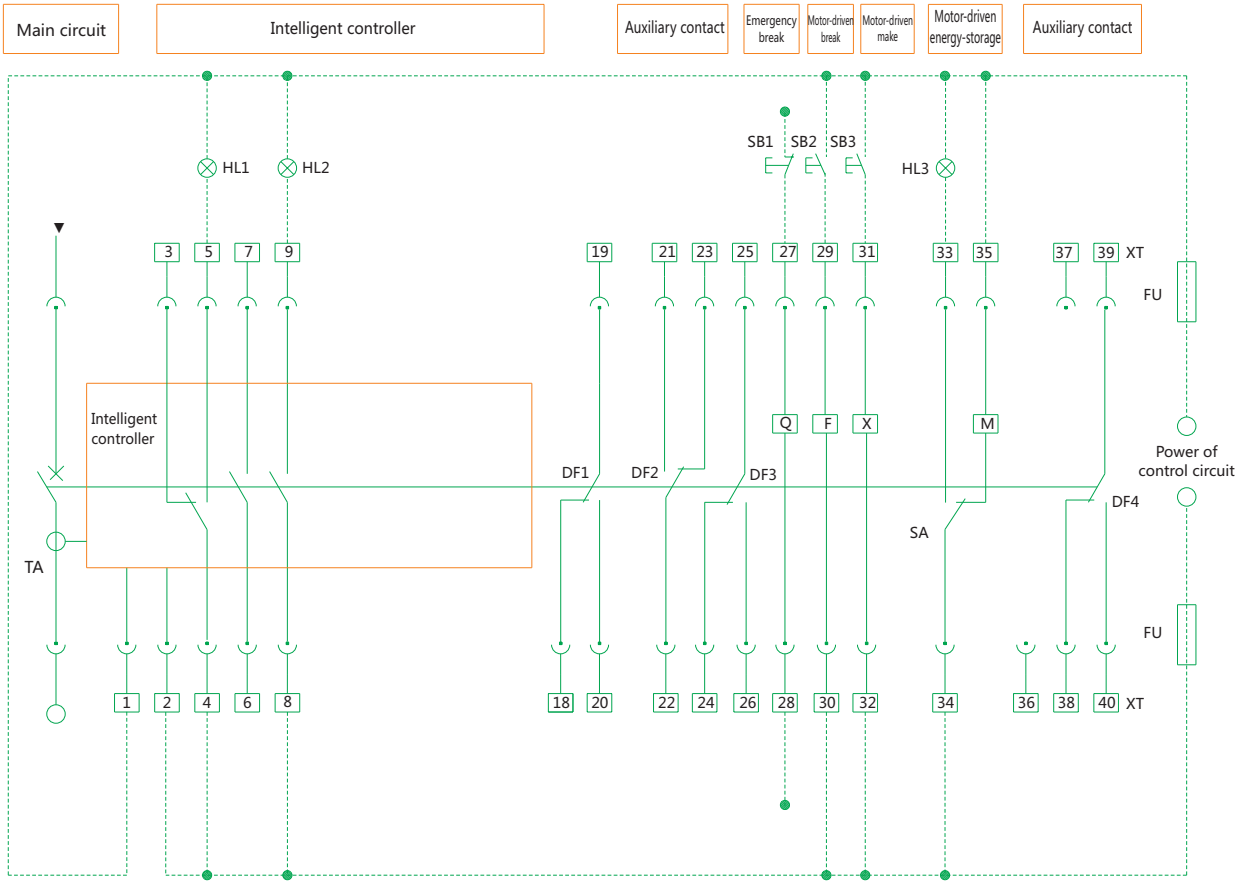

HL1: Failure indicator
HL2: Close indicator
HL3: Energy storage indicator
SB1: Under-voltage button
SB2: Shunt button
SB3: Close button
Q: Under-voltage release
F: Shunt release
X: Close electromagnet
M: Energy storage motor
DF1-DF4: Auxiliary switch
1#, 2#: Auxiliary power input
3#,4#,5#: Fault trip contact output(4# common terminal, contact capacity AC230V,5A
6#,7#: To be connected with current transformer(selective)

8#,9#: Making indicator (capacity AC400V,1A)
27#,28#: Under-voltage release(Connected to the main circuit)
29#,30#: Shunt release
31#,32#: Closing electromagnet
33#,34#,35#: Energy storage motor
18#~26#, 38#~40#: Auxiliary contact
(auxiliary contact capacity: AC230V,5A)

Note:
Dashed is to be connected by users.

Communication type, type (H/3H)

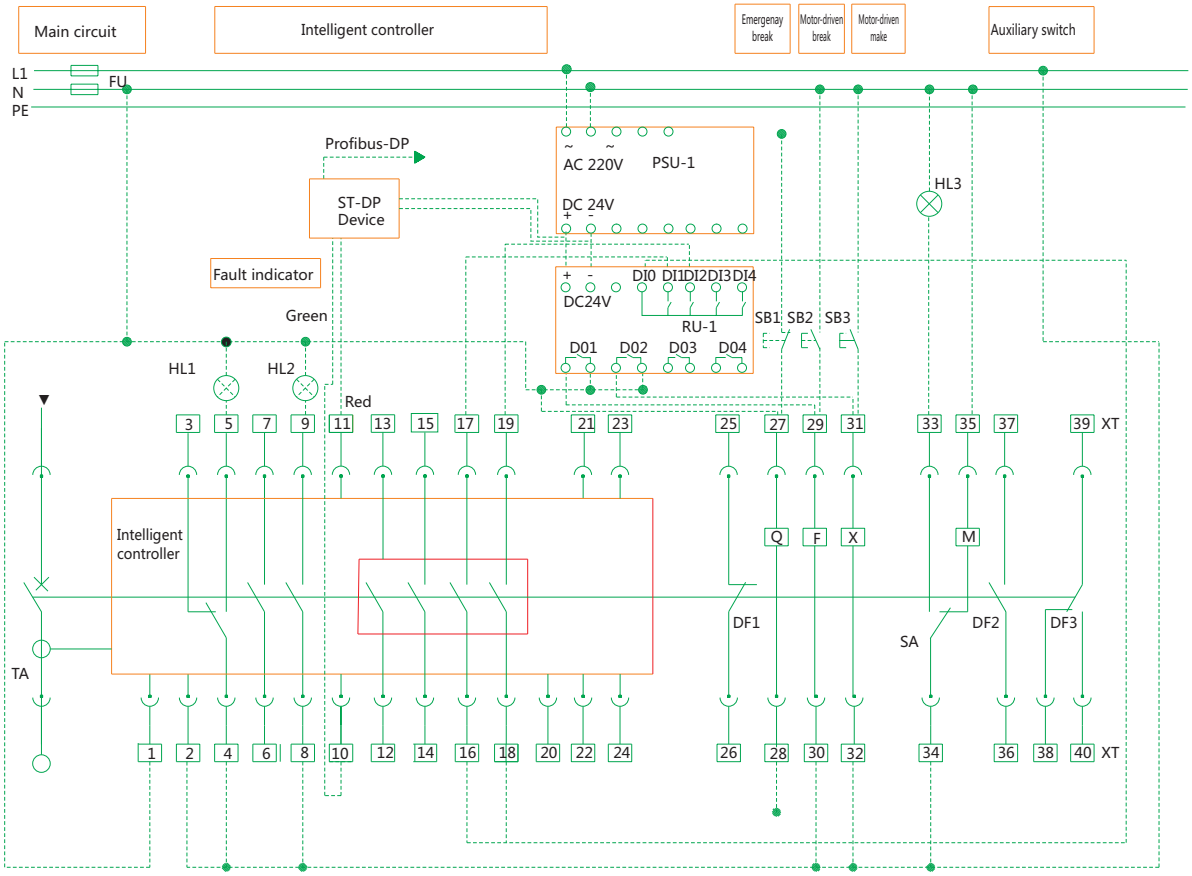

HL1: Failure indicator
HL2: Close indicator
HL3: Energy storage indicator
SB1: Under-voltage button
SB2: Shunt button
SB3: Close button
Q: Under-voltage release
F: Shunt release
X: Close electromagnet
M: Energy storage motor
DF1-DF3: Auxiliary switch
1#, 2#: Auxiliary power input(DC24)
3#,4#,5#: Fault trip contact output(4# common terminal, contact capacity AC230V,5A
6#, 7#: To be connected with current transformer(N/O auxiliary contact, capacity AC400V, 1A,when no current transformer)

Note:
Dashed is to be connected by users.

8#,9#: Making indicator(capacity AC400V,1A)
10#, 11#: communication output
12#, 13#: Signal alarm of load 1 output
14#, 15#: Signal alarm of load 2 output
16#, 17#: Making signal output
18#, 19#: Closing signal output
20#: Communication shield ground line
21#~24#: Voltage signal input of phase N,A,B,C
(With voltage measurement);
21#~23# is a set of auxiliary switches
(Without voltage measurement)
22# common terminal,contact capacity AC230V,5A
25#, 26#: Auxiliary contact (capacity:AC230V,5A)
27#,28#: Under-voltage release(Connected to the main circuit)
29#,30#: Shunt release
31#,32#: Closing electromagnet
33#,34#,35#: Energy storage motor
36#~40#: Auxiliary contact (capacity:AC230V,5A)

Six pairs change-over contacts standard type (M/3M)

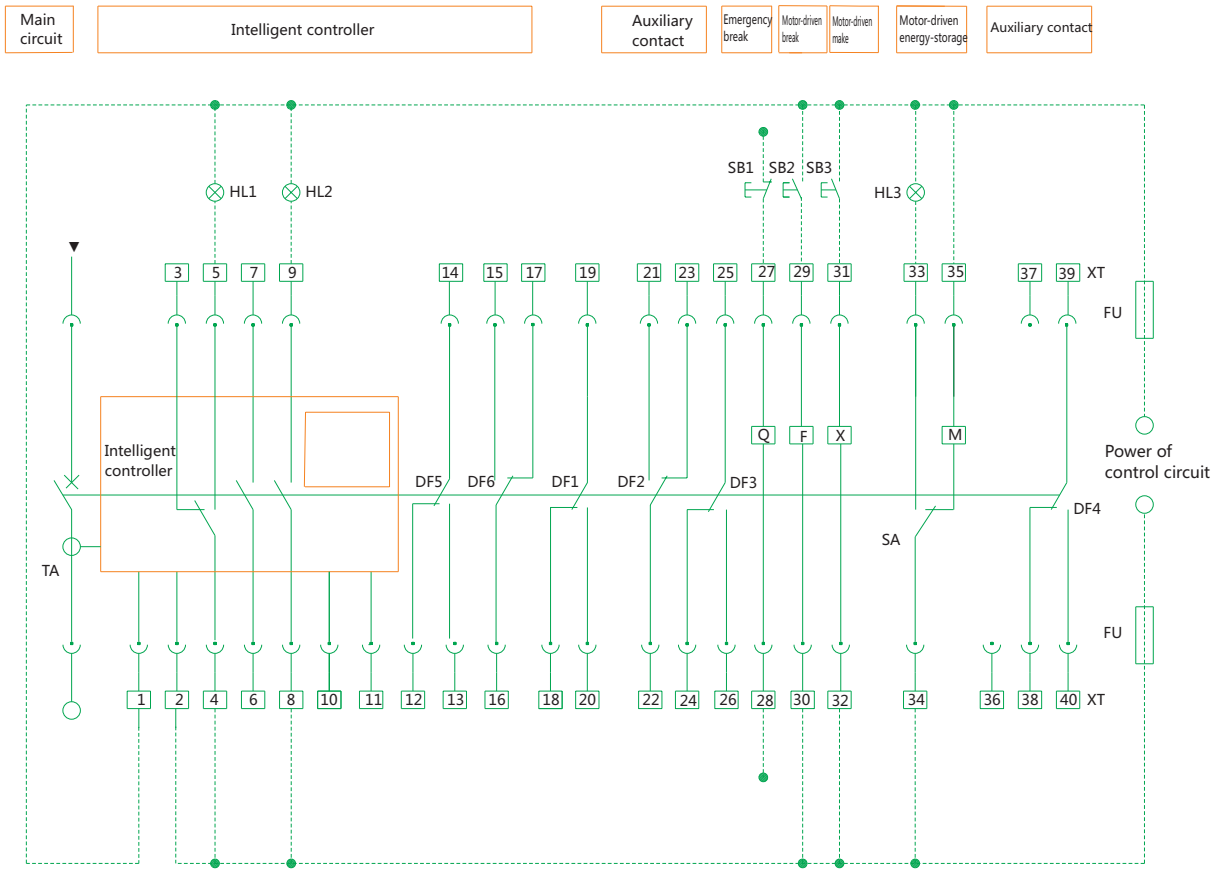

HL1: Failure indicator
HL2: Close indicator
HL3: Energy storage indicator
SB1: Under-voltage button
SB2: Shunt button
SB3: Close button
Q: Under-voltage release
F: Shunt release
X: Close release
M: Energy storage motor
DF1-DF6: Auxiliary switch
1#, 2#: Auxiliary power input
3#,4#,5#: Fault trip contact output(4# common terminal,contact capacity AC230V,5A
6#, 7#: to be connected with current transformer(selective)

8#,9#: Making indicator (capacity AC400V,1A)
12#~26#: Auxiliary contact(auxiliary contact capacity: AC230V,1A)
27#,28#: Under-voltage release(Connected to the main circuit)
29#,30#: Shunt release
31#,32#: Closing release
33#,34#:Energy storage indicator
34#,35#: Energy storage motor
38#~40#: Auxiliary contact(auxiliary contact capacity: AC230V,1A)

Note:

Six pairs change-over contacts , without any additional function.
Dashed is to be connected by users.

6.2 NA1-2000X~6300X

The secondary circuit wiring for NA1-2000X~6300X with standard type (M) intelligent controller and instantaneous under-voltage release

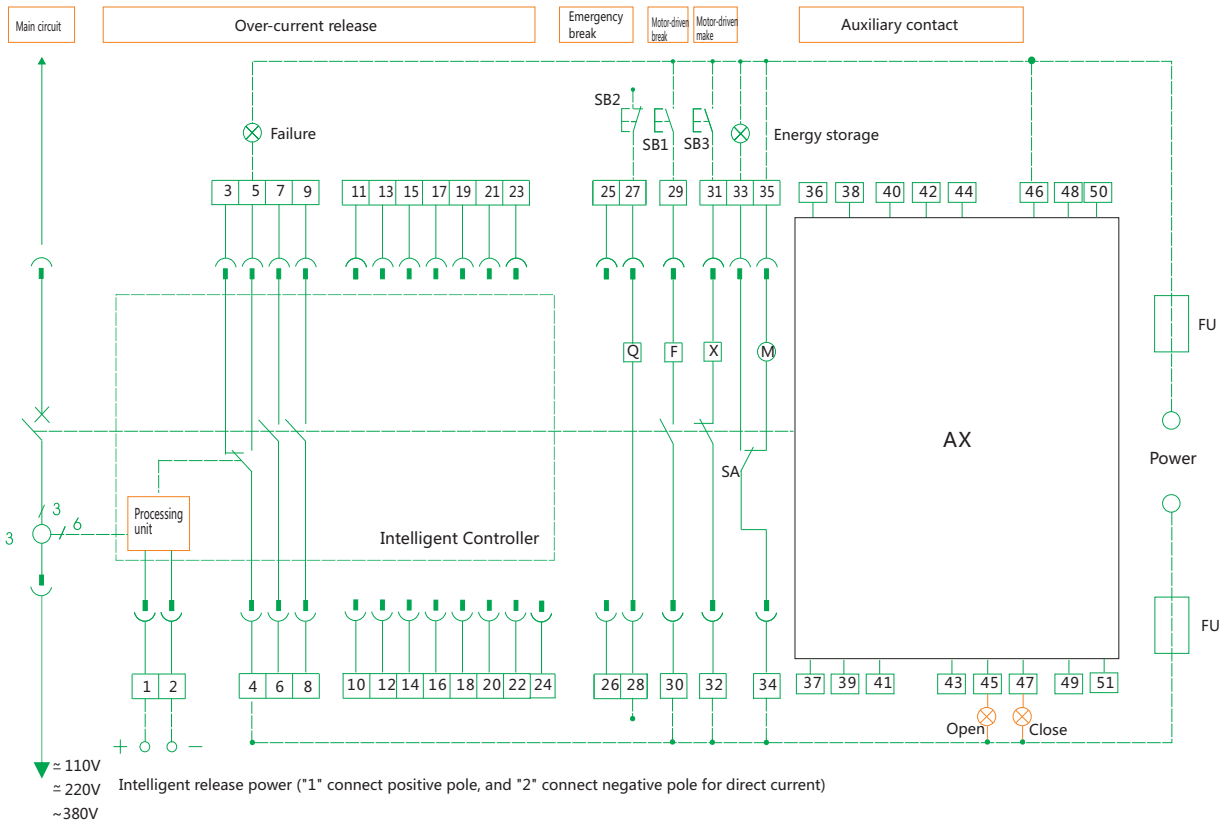

The auxiliary contact modes for customer use

Ⅰ Four pairs change-over contacts

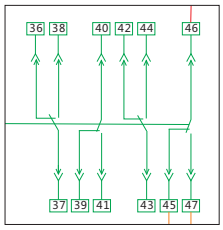

Ⅱ Five pairs change-over contacts

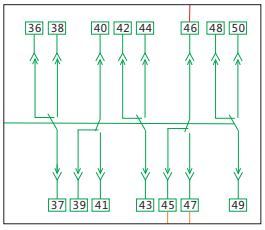

SB1: Shunt button
SB2: Under-voltage button
SB3: Making button
Q: Under-voltage release
F: Shunt release
X: Closing electromagnet
M: Energy storage motor
XT: Connection terminal
SA: Position switch
Note: If control voltage of Q, F, X is different from each other, they can be connected to different power.

1#,2#: Auxiliary power input
3#,4#,5#: Fault trip contact output(4# common terminal)
6#,7#,8#,9#: Auxiliary contact, normal open,
10#~24#: empty
25#,26#: to be connected with current transformer(selective)
27#,28#: Under-voltage release(Connected to the main circuit)
29#,30#: Shunt release
31#,32#: Closing release
33#,34#: Energy storage indicator
34#,35#: Energy storage motor
36#,51#: Auxiliary contact

Circuit explanation for signal output:
a. Broken-line parts shall be provided by customers.
b. Terminals 6#,7# can output NC (normal close) contact if that is required by users.
c. Terminal 35# can be directly connected to power (automatic pre-storing energy), alternatively connect power after connecting NO button (manual-controlled pre-storing energy).
d. Terminals 21#~24# is only for wiring with function meter display. (excluding the special wiring)

The secondary circuit wiring for NA1-2000X~6300X with type (3M) intelligent controller and instantaneous under-voltage release

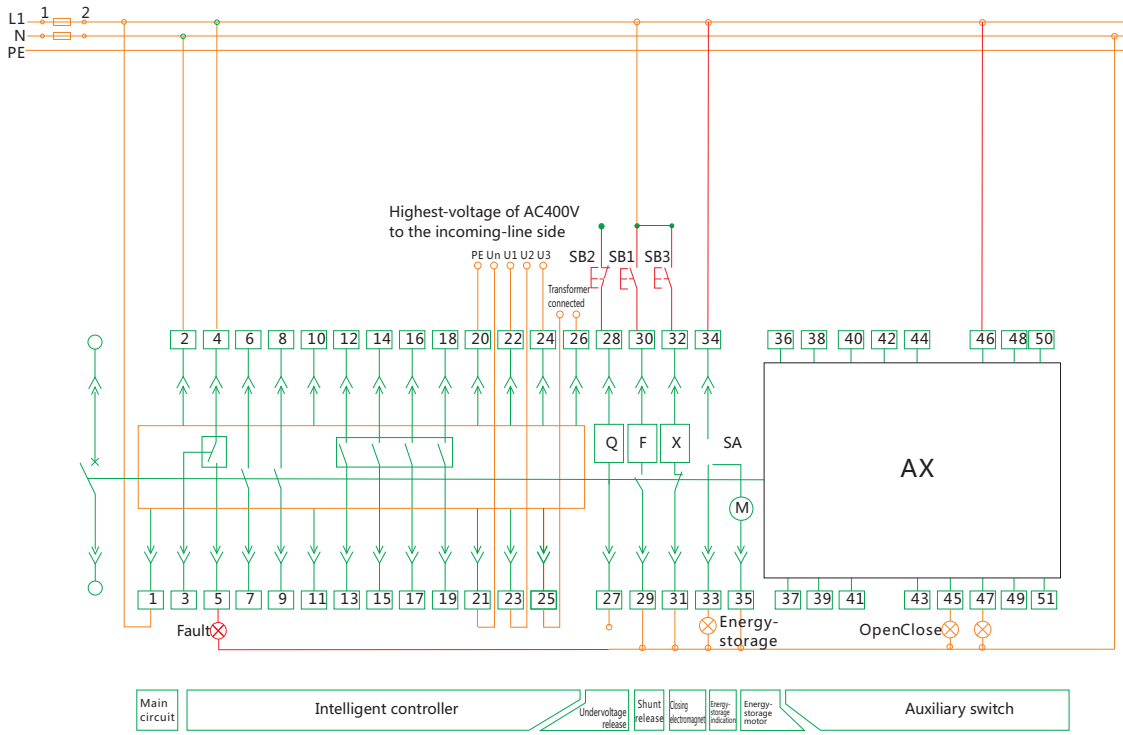

The auxiliary contact modes for customer use

Ⅰ Four pairs change-over contacts

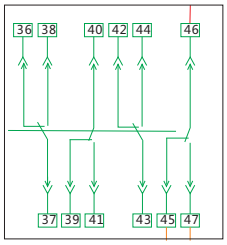

Ⅱ Five pairs change-over contacts

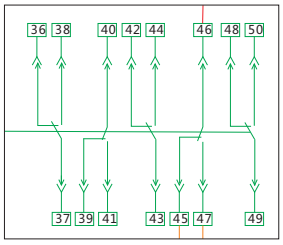

SB1: Shunt button
SB2: Under-voltage button
SB3: Making button
Q: Under-voltage release
F: Shunt release
X: Closing release
M: Energy storage motor
XT: connection terminal
SA: Position switch
1#, 2#: Intelligent controller power input
Note: When the power supply of the intelligent controller is AC power, the 1#~2# connects to the AC power directly. When the power supply is DC power, forbid connecting the 1#~2# to the DC power directly. Add a DC power supply module, then the DC power connect to the input terminal of the DC power supply module, and the 1#~2# connect to the output terminal of the DC power supply module, or else the intelligent controller will be damaged.

3#,4#,5#: Fault trip contact output(4#common terminal)
6#,7#,8#,9#: Auxiliary contact(normal open)
10#~11#: empty
12#~19#: The programmable output terminal. The normal products without these terminals, but if the customer special ordered, the cost extra added.

3M type acquiescence output:
12#,13#: Signal alarm of load 1 output; 14#,15#: Signal alarm of load2 output
16#,17#: Self-diagnose alarm; 18#,19#: Fault trip; 20#: PE line; 21#~24#: Display the voltage of the signal input.
The normal products without these terminals,
if the customer special ordered the function meter, the cost extra added.
21#: N phase input terminal
22#,23#,24#: A, B, C three phase power input terminal (note the sequence)(highest-voltage of AC 400V)

25#,26#: Connect to the N phase current transformer or the input terminal of the current leakage transformer.
The normal products without these terminals, if the customer special ordered, the cost extra added.
27#,28#: Under-voltage release(Connected to the main circuit); 29#,30#: Shunt release; 31#,32#: Closing release;
33#,34#: Energy storage indicator; 34#,35#: Energy storage motor; 36#~51#: Auxiliary contact

Note:

a. Red colored part is to be connected by users
b. When the power system is three phase three wire, directly connect the Un to U2.
(If the voltage exceeds 400V, special explanation when ordered)

The secondary circuit wiring for NA1-2000X~6300X with type (3H) intelligent controller and instantaneous under-voltage release

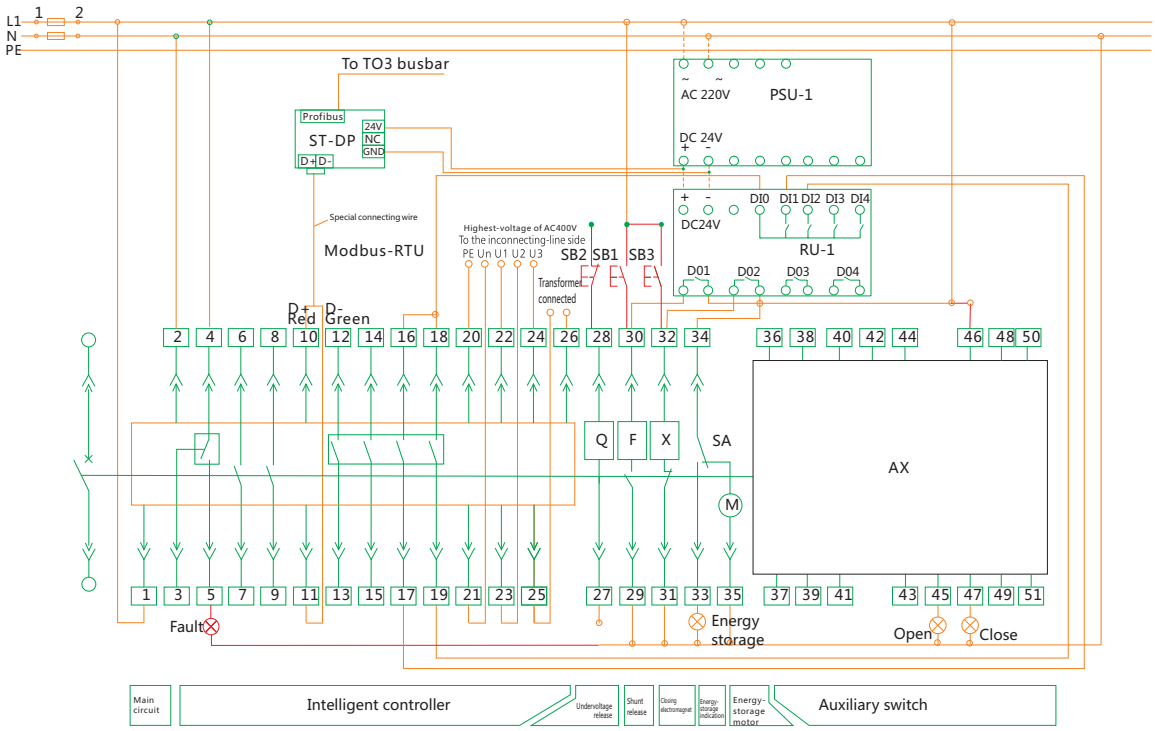

The auxiliary contact modes for customer use

Ⅰ Four pairs change-over contacts

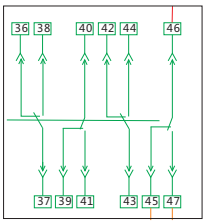

Ⅱ Five pairs change-over contacts

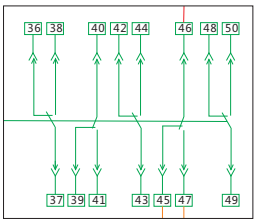

SB1: Shunt button; SB2: Under-voltage button
SB3: Making button; Q: Under-voltage release
F: Shunt release; X: Closing release
M: Energy storage motor; XT: connection terminal
SA: Position switch
1#, 2#: Intelligent controller power input
Note: When the power supply of the intelligent controller is AC power, the 1#~2# connects to the AC power directly. When the power supply is DC power, forbid connecting the 1#~2# to the DC power directly. Add a DC power supply module, then the DC power connect to the input terminal of the DC power supply module, and the 1#~2# connect to the output terminal of the DC power supply module, or else the intelligent controller will be damaged.

3#,4#,5#: Fault trip contact output(4# common terminal)
6#,7#,8#,9#: Auxiliary contact (normal open)
10#~11#: communication output
12#,13#: Signal alarm of load 1 output; 14#,15#: Signal alarm of load2 output
16#,17#:Breaking signal output; 18#,19#:Making signal output
20#: PE line; 21#: N phase input terminal
22#,23#,24#: A, B, C three phase power input terminal (note the sequence)(highest-voltage of AC 400V)

25#26#: Connect to the N phase current transformer or the input terminal of the current leakage transformer. The normal products without these terminals, if the customer special ordered, the cost extra added.
ST~DP: DP protocol module. There is no need for the ST-DP protocol module, if the communication protocol is Modbus-RTV. But when the communication protocol is Profibus-DP, the ST-DP protocol module is necessary, but the cost extra added.
ST power module Ⅳ: power converter (optional components)
ST201: Magnify the signal capacity of the controller. (optional components) If the customer special ordered, the cost extra added.
27#,28#: Under-voltage release(Connected to the main circuit); 29#,30#: Shunt release
31#,32#: Closing release; 33#,34#: Energy storage indicator
34#,35#: Energy storage motor; 36#~51#: Auxiliary contact

Note:

a. Red colored part is to be connected by users
b. When the power system is three phase three wire, directly connect the Un to U2.
(If the voltage exceeds 400V, special explanation when ordered)

The secondary circuit wiring for NA1-2000X~6300X with standard type (M) intelligent controller and time-delay under-voltage release

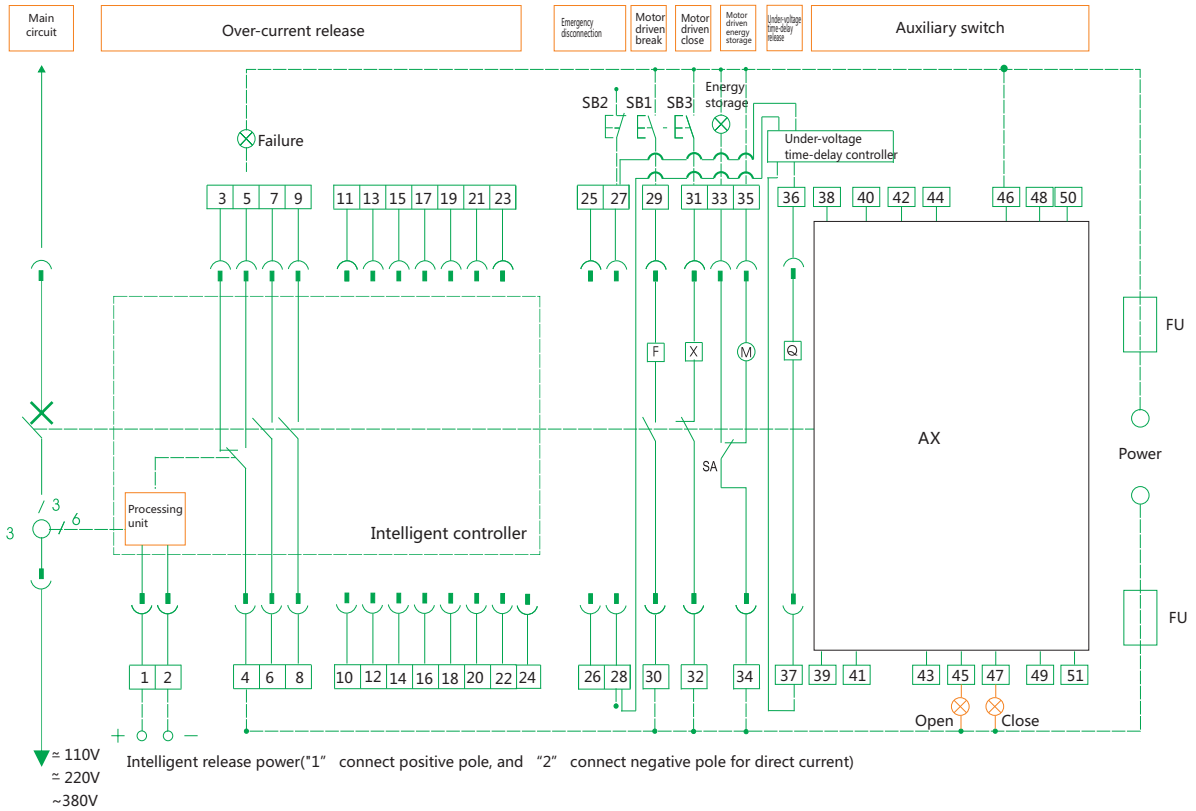

The auxiliary contact modes for customer use

Ⅰ Four pairs change-over contacts

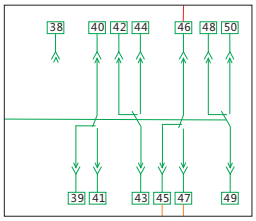

SB1: Shunt button SB2: Under-voltage button SB3: Making button
Q: Under-voltage time-delay release F: Shunt release
X: Closing electromagnet M: Energy storage motor
XT: Connection terminal SA: Position switch
Note: If control voltage of Q, F, X is different from each other, they can be connected to different power.

1#,2#: Auxiliary power input
3#,4#,5#: Fault trip contact output(4# common terminal)
6#,7#,8#,9#: Auxiliary contact (normal open)
10#~24#: empty
25#,26#: to be connected with current transformer(selective)
27#,28#: Under-voltage release(Connected to the main circuit)
29#,30#: Shunt release
31#,32#: Closing release
33#,34#: Energy storage indicator
34#,35#: Energy storage motor
36#,37#: Under-voltage time delay release
38#~51#: Auxiliary contact

Circuit explanation for signal output:
a. Broken-line parts shall be provided by customers.
b. Terminals 6#,7# can output NC (normal close) contact if that is required by users.
c. Terminal 35# can be directly connected to power (automatic pre-storing energy), alternatively connect power after connecting NO button (manual-controlled pre-storing energy).
d. The 21#~24# is only for wiring with function meter display. (Excluding the special wiring)

The secondary circuit wiring for NA1-2000X~6300X with type (3M) intelligent controller and time-delay under-voltage release

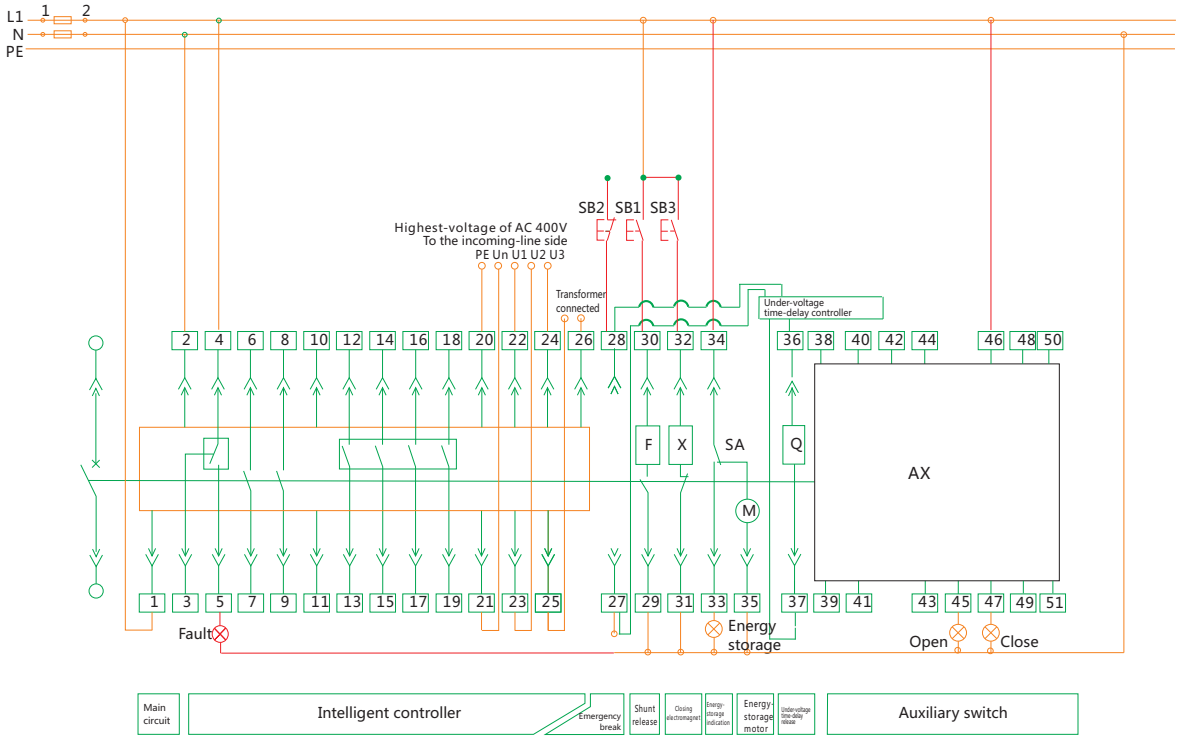

The auxiliary contact modes for customer use

Ⅰ Four pairs change-over contacts

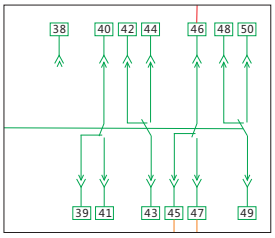

SB1: Shunt button; SB2: Under-voltage button
SB3: Making button; Q: Under-voltage release
F: Shunt release; X: Closing release
M: Energy storage motor; XT: Connection terminal
SA: Position switch
1#, 2#: Intelligent controller power input
Note: When the power supply of the intelligent controller is AC power, the 1#~2# connects to the AC power directly. When the power supply is DC power, forbid connecting the 1#~2# to the DC power directly. Add a DC power supply module, then the DC power connect to the input terminal of the DC power supply module, and the 1#~2# connect to the output terminal of the DC power supply module, or else the intelligent controller will be damaged.

3#,4#,5#: Fault trip contact output(4# common terminal); 6#,7#,8#,9#: Auxiliary contact (normal open)
10#~11#: empty; 12#~19# are the programmable output terminal. The normal products without these terminals, but if the customer special ordered, the cost extra added.

3M type acquiescence output:
12#,13#: Signal alarm of load 1 output; 14#,15#: Signal alarm of load2 output
16#,17#: Self-diagnose alarm; 18#,19#: Fault trip
20#: PE line; 21#~24#: Display the voltage of the signal input. The normal products without these terminals, if the customer special ordered the function meter, the cost extra added.
21#: N phase input terminal; 22#,23#,24#: A, B, C three phase power input terminal (note the sequence)(Highest-voltage of AC400V)

25#,26# Connect to the N phase current transformer or the input terminal of the current leakage transformer. The normal products without these terminals, if the customer special ordered, the cost extra added.
27#,28#: Under-voltage release(Connected to the main circuit); 29#,30#: Shunt release
31#,32#: Closing release; 33#,34#: Energy storage indicator
34#,35#: Energy storage motor; 36#,37#: Under-voltage time delay release
38#~51#: Auxiliary contact

Note:

a. Red colored part is to be connected by users
b. When the power system is three phase three wire, directly connect the Un to U2. (If the voltage exceeds 400V, special explanation when ordered)

The secondary circuit wiring for NA1-2000X~6300X with type (3H) intelligent controller and time-delay under-voltage release

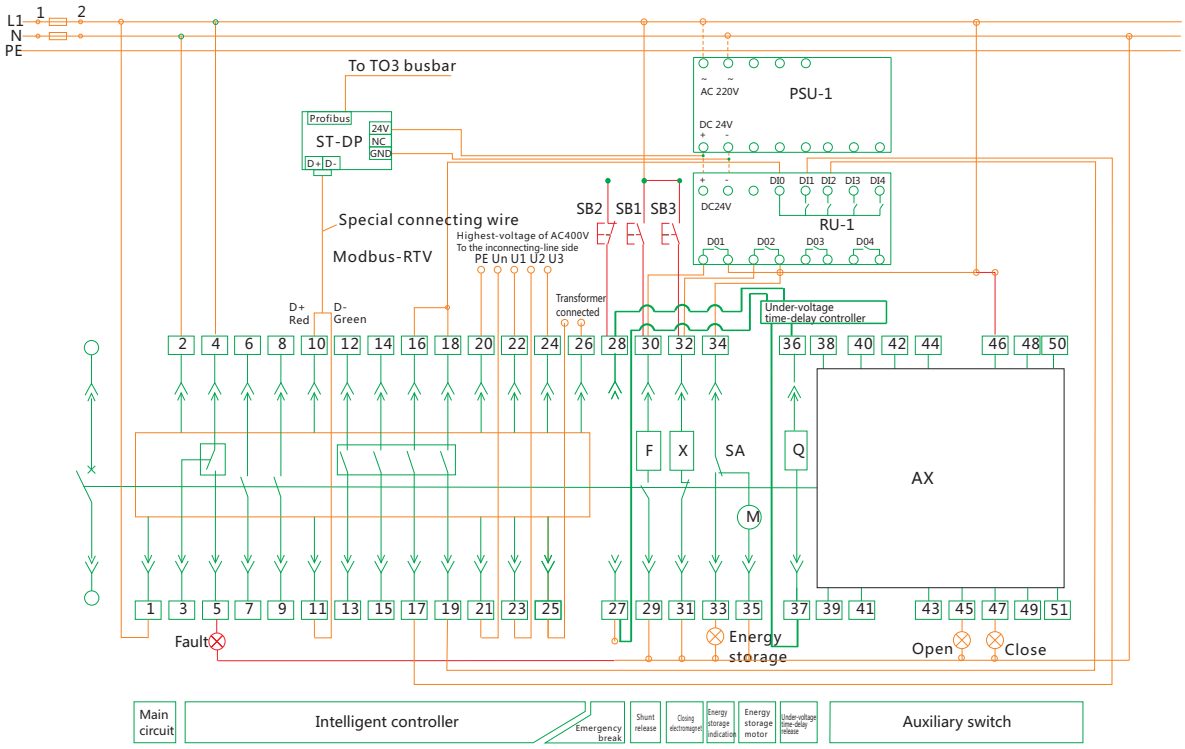

The auxiliary contact modes for customer use

Ⅰ Four pairs change-over contacts

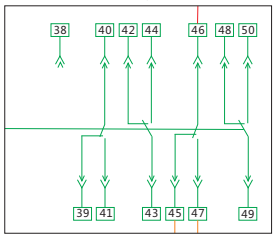

SB1: Shunt button; SB2: Under-voltage button
SB3: Making button; Q: Under-voltage release
F: Shunt release; X: Closing release
M: Energy storage motor; XT: Connection terminal
SA: Position switch
1#, 2#: Intelligent controller power input
Note: When the power supply of the intelligent controller is AC power, the 1#~2# connects to the AC power directly. When the power supply is DC power, forbid connecting the 1#~2# to the DC power directly. Add a DC power supply module, then the DC power connect to the input terminal of the DC power supply module, and the 1#~2# connect to the output terminal of the DC power supply module, or else the intelligent controller will be damaged.

3#,4#,5#: Fault trip contact output(4# common terminal)
6#,7#,8#,9#: Auxiliary contact (normal open)
10#~11#: Communication output; 12#,13#: Signal alarm of load 1 output
14#,15# : Signal alarm of load 2 output; 16#,17#: Breaking signal output; 18#,19#: Closing signal output
20#: PE line; 21#: N phase input terminal
22#,23#,24#: A, B, C three phase power input terminal (note the sequence)(highest-voltage of AC400V)
25#,26# Connect to the N phase current transformer or the input terminal of the current leakage transformer.
The normal products without these terminals, if the customer special ordered, the cost extra added.
ST~DP: DP protocol module. There is no need for the ST-DP protocol module,
if the communication protocol is Modbus-RTV. But when the communication protocol is Profibus-DP,
the ST-DP protocol module is necessary, but the cost extra added.
ST power module IV: power converter (optional components)
ST201: Magnify the signal capacity of the controller. (optional components)
If the customer special ordered, the cost extra added.
27#,28#: Under-voltage release(Connected to the main circuit); 29#,30#: Shunt release
31#,32#: Closing release; 33#,34#: Energy storage indicator
34#,35#: Energy storage motor; 36#,37#: Under-voltage time delay release
38#~51#: Auxiliary contact

Note:
a. Red colored part is to be connected by users
b. When the power system is three phase three wire, directly connect the Un to U2.
(If the voltage exceeds 400V, special explanation when ordered)

7. Installation

7.1 Installation

7.1.1 Unload the breaker from the soleplate of package. If it is drawout type, firstly pull out the handle under the drawer-base of breaker, and plug it into the hole on central part of plastic cover under the drawer-base crossbeam, anticlockwise turns the handle, the body will slowly slide along the outside of drawer-base.

When the guide rod points to separated position and handle can't be rotated any longer, pull out the handle and firmly grasp the aluminum handle on drawer-base, pull out the breaker body and remove it form the base, then move the base from the sole plate and clean up the dirty things inside the drawer-base.

Possible positions

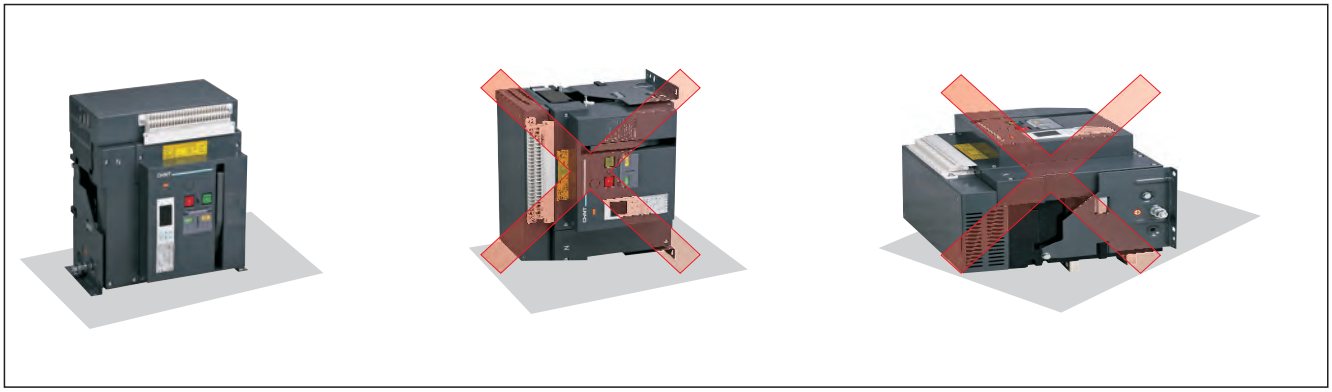

7.1.2 Check the insulation resistance with a 500V megger, resistance should not be less than 20MΩ when ambient temperature is 20℃±5℃ and relative humidity is 50%~70%. Otherwise dry it.

7.1.3 Power supply

NA1 devices can be supplied either from the top or from the bottom without reduction in performance, in order to facilitate connection when installed in a switchboard.

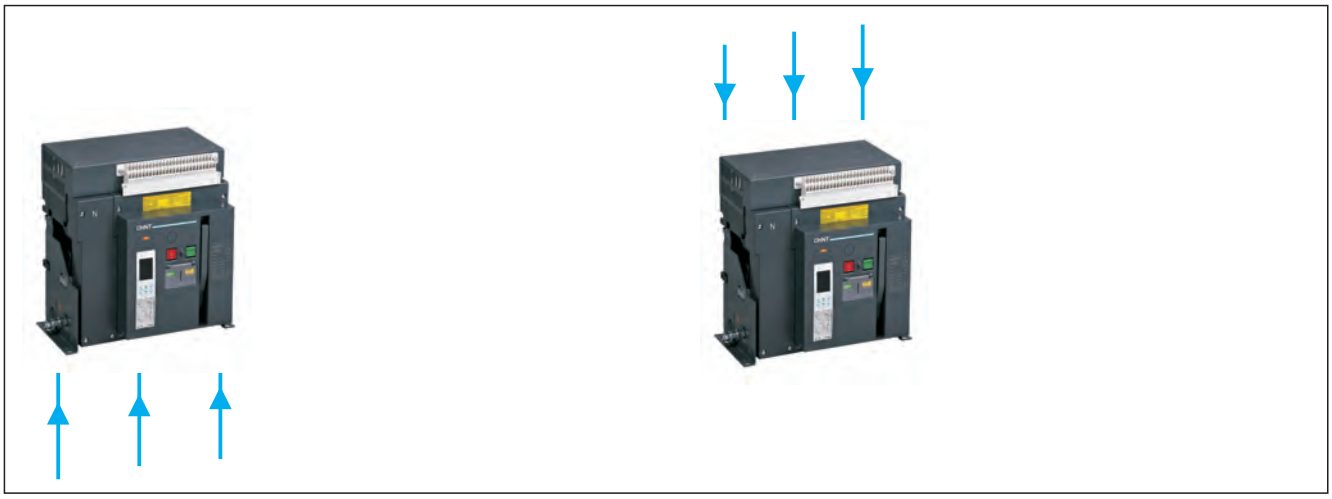

7.1.4 Put the breaker (fixed-type) or drawer-base (drawout-type) into the installation-bracket, and make it fixed, directly connect the cable wire of main circuit to the bus wire of fixed-type circuit breaker. Alternatively put breaker body onto the slideway of drawer-base. Plug the handle into installation hole, clockwise turns it until the under-part of drawer-base points at the connection position and " click" sound is heard. It indicates that breaker body has been connected to its place, then connect the cable of main circuit to drawer-base.

Mounting the circuit-breaker

It is important to distribute the weight of the device uniformly over a rigid mounting surface such as rails or a base plate.

This mounting plane should be perfectly flat (tolerance on support flatness: 2 mm).This eliminates any risk of deformation which could interfere with correct operation of the circuit breaker.

NA1 devices can also be mounted on a vertical plane using the special brackets.

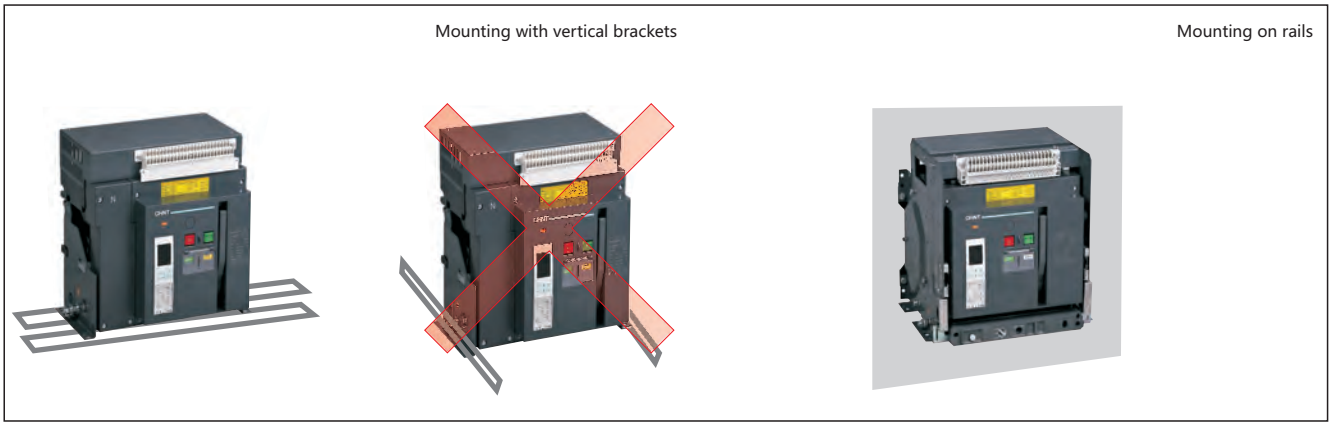

7.1.5 Partitions

Sufficient openings must be provided in partitions to ensure good air circulation around the circuit breaker;
Any partition between upstream and downstream connections of the device must be made of nonmagnetic material.
For high-currents, of 2500 A and upwards, the metal supports or barriers in the immediate vicinity of a conductor ;Metal barriers through which a conductor passes must not form a magnetic loop.

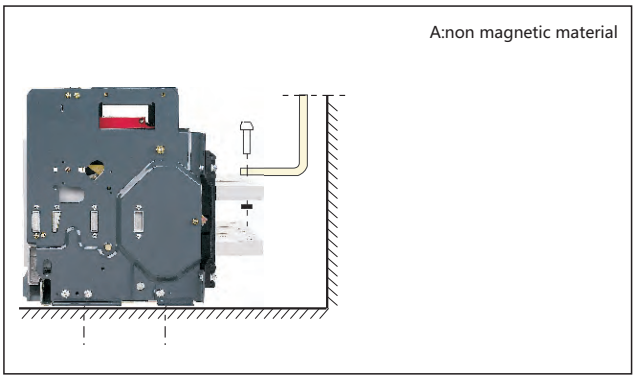

Busbars

The mechanical connection must be exclude the possibility of formation of a magnetic loop around a conductor.

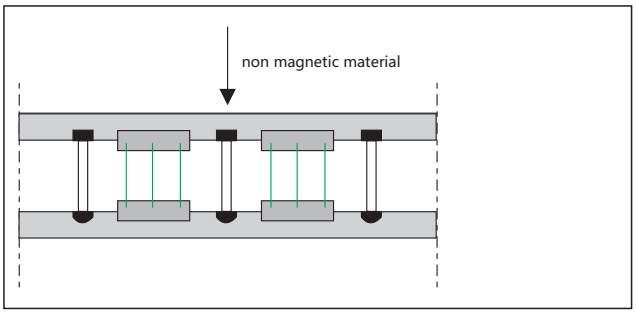

7.1.6 Busbar connections

The busbars should be suitably adjusted to ensure the connection points are positioned on the terminals before the bolts B are inserted. The connections are held by the supporter which is fixed to the framework of the switchboard, in this way the circuit breaker terminals do not have to support its weight C.
(This support should be placed close to the terminals).

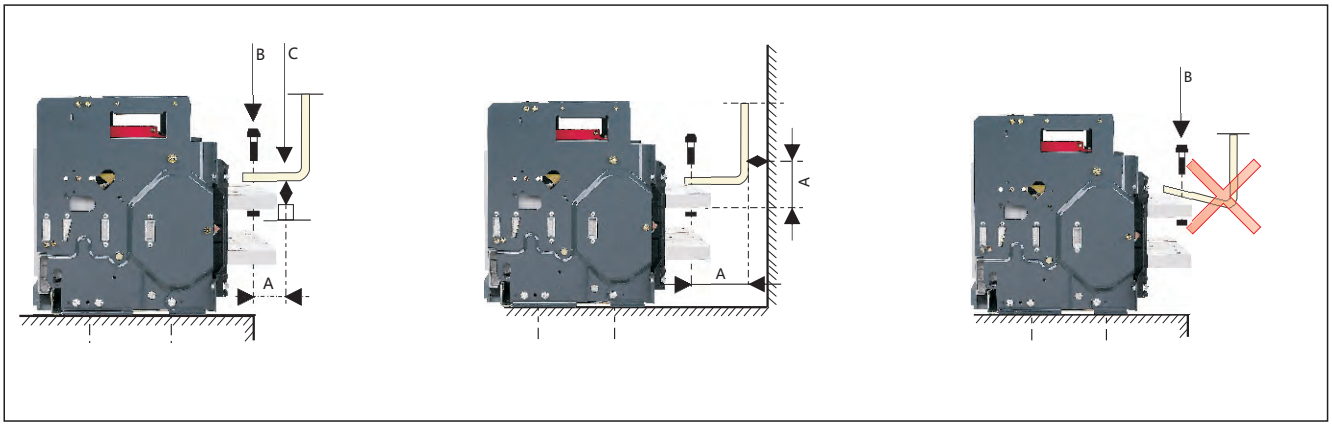

7.1.7 Main circuit adopts cable connection

Users should not apply too strong mechanical strength on the terminals of Air Circuit Breaker. Extend the bus-bar of circuit breaker with connecting bus-bar, position the wiring piece of cable before inserting bolts; the cable should be fixed on the frame of distributing cabinet firmly.

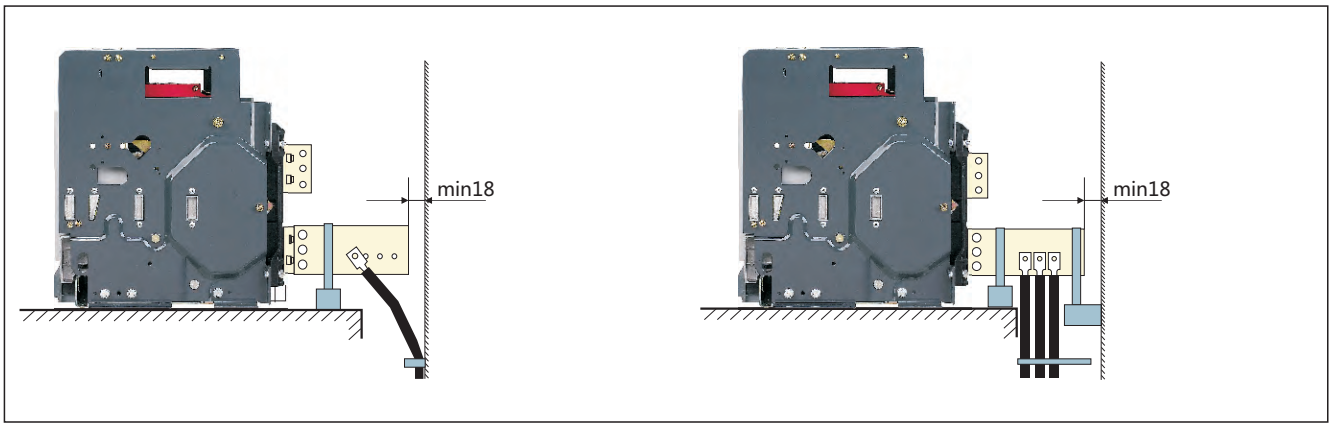

7.1.8 Clamping

Correct clamping of busbars depends on the tightening torques used for the nuts and bolts,etc. Over-tightening may have the same consequences as under-tightening.

For connecting busbars to the circuit breaker, the tightening torques to be used are shown in the table below. These values are for use with copper busbars and steel nuts and bolts, class ≥8.8.

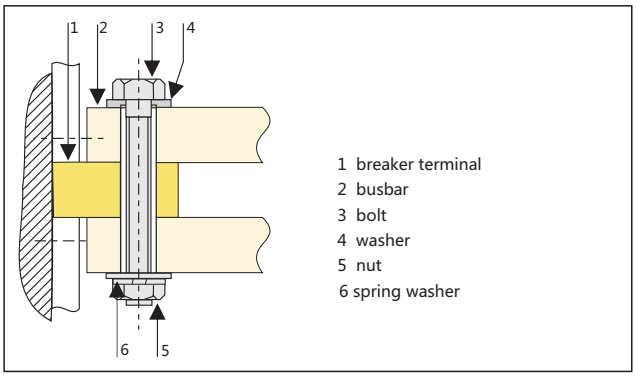

Examples

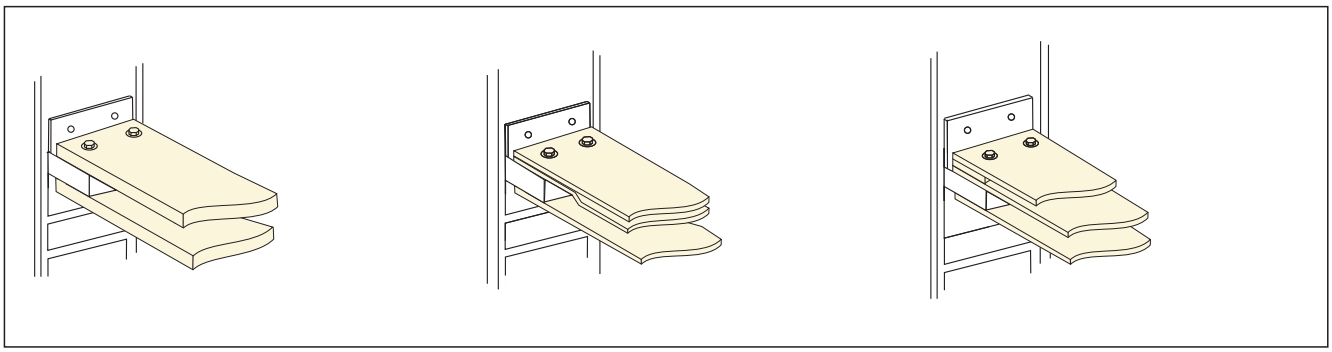

Preferred tightening torque for NA1's tightening components

Type of screw	Application	Preferred tightening torque
M3	Screws for secondary terminals	0.5~0.7 N·m
M10	Installing bolts of Air Circuit Breaker	38~55 N·m
M12	Connection terminals	61~94 N·m

Connected position	Test position	Disconnected position	Drawout position
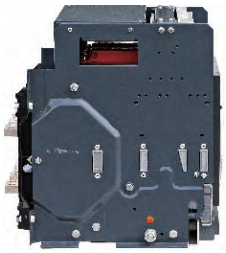	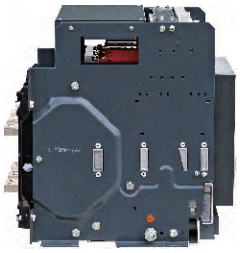	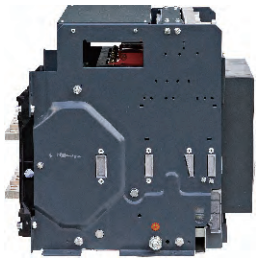	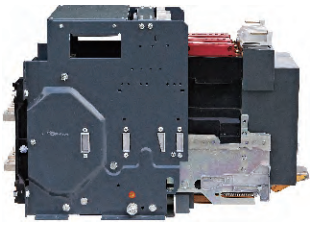
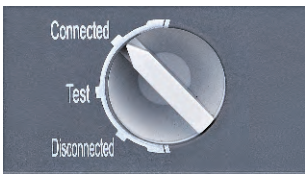	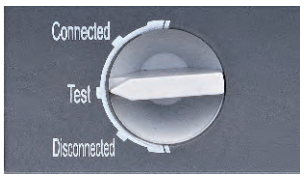	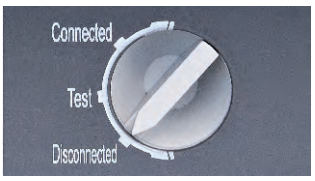	
1.Both main circuit and control circuit are connected. 2.Normal application conditions	1.The main circuit is disconnected, and the control circuit is connected. 2.Test application conditions.	Neither the main circuit nor the control circuit is connected.	Main body is out of the drawer seat.

7.2 Wiring the secondary circuit according to electric principle diagram.
Note: Bolts, nuts, gaskets shouldn't be left inside the drawer seat to avoid being blocked.

7.3 Operation
Check the rated voltage of the following components whether conforms to the power voltage . Such as under voltage release, shunt release, closing electromagnet, motor-driven mechanism and intelligent controller.

7.4 Maintenance
Check the technical parameters in time or add some lubricating oil, etc.
This breaker structure is arranged vertically and modularized composition with each functioncell separated, which make the maintenance easy.
It has compact structure, reliable operation and strong free maintenance capability. Please check the technical parameters on the nameplate in accordance with the requirements of order before installation.

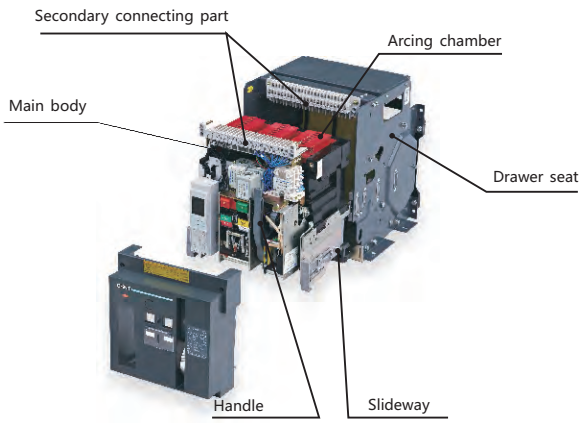

Making the secondary circuit power, the motor-driven mechanism can store energy automatically until hearing the click and energy stored indicating on the panel.

Otherwise press the storage handle for 6 times until hearing the click and the indicator display energy stored

And the closing operation can be realized either by closing electromagnet or manual button.

Manual energy-storage

Shake with the manual energy-storage handle up and down about six times to "click".

8. Recommendation for user's connecting bus-bar

Inm(A)		NA1-1000X					NA1-2000X/NA1-2000XN/NA1-2000XH						NA1-3200X/NA1-3200XN			NA1-4000X		NA1-6300X/NA1-6300XN		
In(A)		200	400	630	800	1000	630	800	1000	1250	1600	2000	2000	2500	3200	4000/3P	4000/4P	4000	5000	6300
Busbar	Thickness(mm)	5	5	5	6	8	5	6	8	10	12	10	8	10	10	10	-	10	10	10
	Width(mm)	30	30	40	50	50	60	60	60	60	60	60	100	100	100	120	-	100	100	100
	Number	1	2	2	2	2	2	2	2	2	2	3	2	2	4	4	-	5	7	8

Note: the specifications in the table is obtained as the ambient temperature of air circuit breaker is 40℃, with open installation; this is in compliance with the specification of copper busbars adopted under the heating conditions regulated in IEC/EN60947-2.

9. Power loss

Inm(A)		NA1-1000X					NA1-2000X/NA1-2000XN/NA1-2000XH						NA1-3200X/NA1-3200XN			NA1-4000X		NA1-6300X/NA1-6300XN		
In(A)		200	400	630	800	1000	630	800	1000	1250	1600	2000	2000	2500	3200	4000/3P	4000/4P	4000	5000	6300
Power loss (W)	Drawer type	40	101	123	110	171	70	110	172	268	440	530	384	600	737	921	-	575	898	1426
	Fixed type	33	85	107	94	146	34.4	50	78	122	200	262	200	312	307	450	-	-	-	-

10. A^2S curve

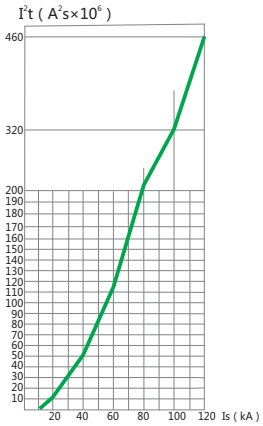

Is: prospective symmetrical current(of an a.c. circuit)

11. Temperature compensation correction

Standard	Ambient temperature	NA1-1000X					NA1-2000X/NA1-2000XN/NA1-2000XH						NA1-3200X/NA1-3200XN NA1-4000X				NA1-6300X/ NA1-6300XN		
IEC/EN60947-2	40℃	200	400	630	800	1000	630	800	1000	1250	1600	2000	2000	2500	3200	4000	4000	5000	6300
	45℃	200	395	623	800	985	630	800	1000	1250	1600	2000	2000	2500	3200	3800	4000	5000	6000
	50℃	200	384	605	800	960	630	800	1000	1250	1600	2000	2000	2500	3200	3600	4000	5000	5600
	55℃	200	328	584	800	924	630	800	1000	1250	1500	1900	2000	2300	3000	3400	4000	4800	5400
	60℃	200	248	548	800	870	610	800	1000	1250	1300	1800	2000	2200	2800	3200	4000	4800	5200
	65℃	192	192	500	800	810	610	800	1000	1250	1300	1650	2000	2200	2600	3000	4000	4600	5100
	70℃	170	170	473	750	750	473	800	1000	1200	1200	1400	2000	2000	2200	2520	4000	4000	4200

Note: The ACB is to calibrated at 40℃, special application please refer to the table above and the curve below.

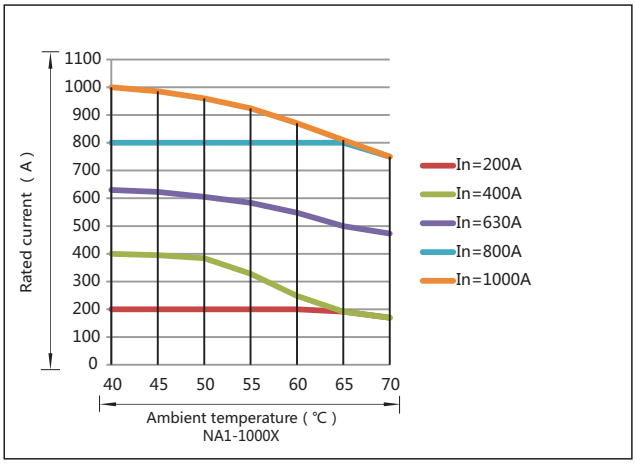

NA1-1000X

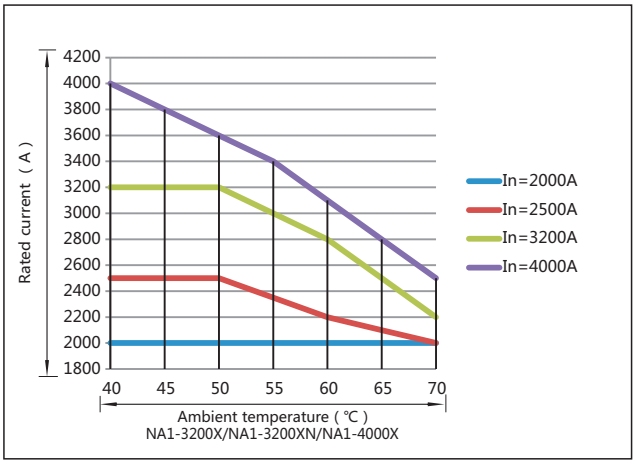

NA1-3200X/NA1-3200XN/NA1-4000X

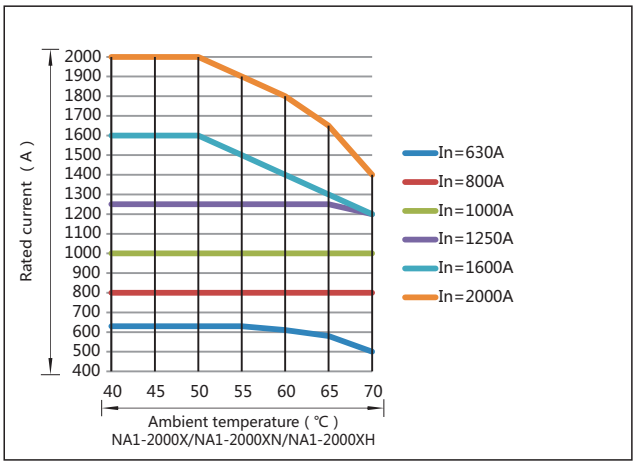

NA1-2000X/NA1-2000XN/NA1-2000XH

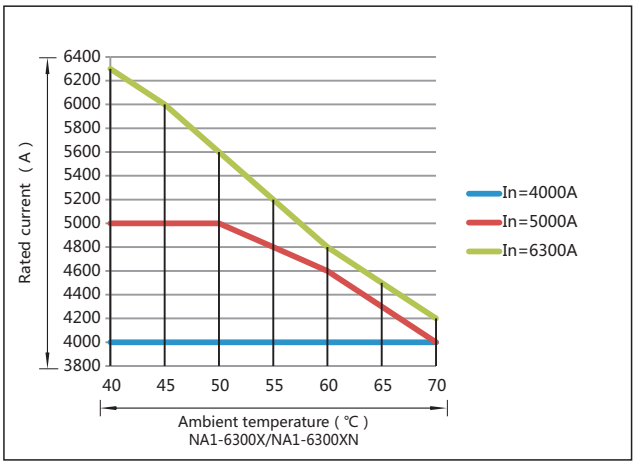

NA1-6300X/NA1-6300XN

12. Coordination recommendations

Capacity of transformer (kVA) & parallelly connected number	Rated current of transformer In(A)	Short circuit current of main circuit (kA)	Breaking capacity of air circuit breaker for main circuit (kA)
1×250	360	9	9
2×250	360	9	9
3×250	360	9	18.5
1×315	455	11.4	11.4
2×315	455	11.4	11.4
3×315	455	11.4	22.7
1×400	578	14.4	14.4
2×400	578	14.4	14.4
3×400	578	14.4	28.8
1×500	722	18	18
2×500	722	18	18
3×500	722	18	36.1
1×630	910	22.7	22.7
2×630	910	22.7	22.7
3×630	910	22.7	44.5
1×800	1154	19.3	19.3
2×800	1154	19.3	19.3
3×800	1154	19.3	38.5
1×1000	1444	24	24
2×1000	1444	24	24
3×1000	1444	24	48.1
1×1250	1805	30	30
2×1250	1805	30	30
3×1250	1805	30	60.1
1×1600	2310	36.5	36.5
2×1600	2310	36.5	36.5
3×1600	2310	36.5	73
1×2000	2887	48.2	48.2
2×2000	2887	48.2	48.2
3×2000	2887	48.2	96.3
1×2500	3608	60	60
2×2500	3608	60	60
1×3150	4550	75.8	75.8
2×3150	4550	75.8	75.8

Type of air circuit breaker for main circuit	Number and area of the busbar for main circuit (n×W×T)	Breaking capacity of air circuit breaker for branch circuit (kA)	Air circuit breaker for branch circuit
NA1-1000X-400	2×(5×30)	9	NA1, NM8
NA1-1000X-400		18.5	
NA1-1000X-400		27.5	
NA1-1000X-630	2×(5×40)	11.4	NA1, NM8
NA1-1000X-630		22.7	
NA1-1000X-630		34.1	
NA1-1000X-630	2×(5×40)	14.4	NA1, NM8
NA1-1000X-630		28.8	
NA1-1000X-630		43.2	
NA1-1000X-800	2×(6×50)	18	NA1, NM8
NA1-1000X-800		36.1	
NA1-1000X-800		54.1	
NA1-1000X-1000	2×(8×50)	22.7	NA1, NM8
NA1-1000X-1000		44.5	
NA1-2000X-1000		67.2	
NA1-2000X-1250	2×(10×60)	19.3	NA1, NM8
NA1-2000X-1250		38.5	
NA1-2000X-1250		57.8	
NA1-2000X-1600	2×(12×60)	24	NA1, NM8
NA1-2000X-1600		48.1	
NA1-2000X-1600		72.1	
NA1-2000X-2000	3×(10×60)	30	NA1, NM8
NA1-2000X-2000		60.1	
NA1-2000X-2000		90.1	
NA1-3200X-2500	2×(10×100)	36.5	NA1, NM8
NA1-3200X-2500		73	
NA1-3200X-2500		109.5	
NA1-3200X-3200	4×(10×100)	48.2	NA1, NM8
NA1-3200X-3200		96.3	
NA1-3200X-3200		144.5	
NA1-6300X-4000	4×(10×120)	60	NA1, NM8
NA1-6300X-4000		120	
NA1-6300X-5000	7×(10×100)	75.8	NA1, NM8
NA1-6300X-5000		151.6	

13. Selectivity protection

13.1 Selective protection between NM8 and NA1

				Circuit breaker	NA1-2000X/NA1-2000XN/NA1-2000XH			
Downstream			Upstream	Rated current (A)	630	800	1000	1250
				Default setting ratings of short time-delay 8In (kA)	5.04	6.4	8	10
				Setting range (kA)	0.63 ~ 9.45	0.8~12	1~15	1.25~18.75
				Delayed tripping time (s)	0.1, 0.2, 0.3, 0.4			
				Returnable time	0.06, 0.14, 0.23, 0.35			
Frame size rated current	**Rated current (A)**	**Instantaneous setting ratings (kA)**						
NM8-125 NM8S-125	16	0.16 0.19(motor)			0.63~9.45 0.63~9.45	0.8~12 0.8~12	1~15 1~15	1.25~18.75 1.25~18.75
	20	0.2 0.24(motor)			0.63~9.45 0.63~9.45	0.8~12 0.8~12	1~15 1~15	1.25~18.75 1.25~18.75
	25	0.25 0.30(motor)			0.63~9.45 0.63~9.45	0.8~12 0.8~12	1~15 1~15	1.25~18.75 1.25~18.75
	32	0.32 0.38(motor)			0.63~9.45 0.63~9.45	0.8~12 0.8~12	1~15 1~15	1.25~18.75 1.25~18.75
	40	0.40 0.48(motor)			0.63~9.45 0.6624~9.45	0.8~12 0.8~12	1~15 1~15	1.25~18.75 1.25~18.75
	50	0.50 0.60(motor)			0.69~9.45 0.828~9.45	0.8~12 0.828~12	1~15 1~15	1.25~18.75 1.25~18.75
	63	0.63 0.75(motor)			0.8694~9.45 1.035~9.45	0.8694~12 1.035~12	1~15 1.035~15	1.25~18.75 1.25~18.75
	80	0.80 0.96(motor)			1.104~9.45 1.325~9.45	1.104~12 1.325~12	1.104~15 1.325~15	1.25~18.75 1.325~18.75
	100	1.0 1.20(motor)			1.38~9.45 1.656~9.45	1.38~12 1.656~12	1.38~15 1.656~15	1.38~18.75 1.656~18.75
	125	1.25 1.5(motor)			1.725~9.45 2.07~9.45	1.725~12 2.07~12	1.725~15 2.07~15	1.725~18.75 2.07~18.75
NM8-250 NM8S-250	100	1.0 1.2(motor)			1.38~9.45 1.656~9.45	1.38~12 1.656~12	1.38~15 1.656~15	1.38~18.75 1.656~18.75
	160	1.6 1.92(motor)			2.208~9.45 2.65~9.45	2.208~12 2.65~12	2.208~15 2.65~15	2.208~18.75 2.65~18.75
	200	2.0 2.4(motor)			2.76~9.45 3.312~9.45	2.76~12 3.312~12	2.76~15 3.312~15	2.76~18.75 3.312~18.75
	250	2.5 3.0(motor)			3.45~9.45 4.14~9.45	3.45~12 4.14~12	3.45~15 4.14~15	3.45~18.75 4.14~18.75

		NA1-3200X/NA1-3200XN			**NA1-4000X**	**NA1-6300X/NA1-6300XN**		
1600	2000	2000	2500	3200	4000	4000	5000	6300
12.8	16	16	20	25.6	32	32	40	50.4
1.6~24	2~30	2~30	2.5~37.7	3.2~48	4~60	4~60	5~75	6.3~94.5
0.1, 0.2, 0.3, 0.4								
0.06, 0.14, 0.23, 0.35								
1.6~24 1.6~24	2~30 2~30	2~30 2~30	2.5~37.7 2.5~37.7	3.2~48 3.2~48	4~60 4~60	4~60 4~60	5~75 5~75	6.3~94.5 6.3~94.5
1.6~24 1.6~24	2~30 2~30	2~30 2~30	2.5~37.7 2.5~37.7	3.2~48 3.2~48	4~60 4~60	4~60 4~60	5~75 5~75	6.3~94.5 6.3~94.5
1.6~24 1.6~24	2~30 2~30	2~30 2~30	2.5~37.7 2.5~37.7	3.2~48 3.2~48	4~60 4~60	4~60 4~60	5~75 5~75	6.3~94.5 6.3~94.5
1.6~24 1.6~24	2~30 2~30	2~30 2~30	2.5~37.7 2.5~37.7	3.2~48 3.2~48	4~60 4~60	4~60 4~60	5~75 5~75	6.3~94.5 6.3~94.5
1.6~24 1.6~24	2~30 2~30	2~30 2~30	2.5~37.7 2.5~37.7	3.2~48 3.2~48	4~60 4~60	4~60 4~60	5~75 5~75	6.3~94.5 6.3~94.5
1.6~24 1.6~24	2~30 2~30	2~30 2~30	2.5~37.7 2.5~37.7	3.2~48 3.2~48	4~60 4~60	4~60 4~60	5~75 5~75	6.3~94.5 6.3~94.5
1.6~24 1.6~24	2~30 2~30	2~30 2~30	2.5~37.7 2.5~37.7	3.2~48 3.2~48	4~60 4~60	4~60 4~60	5~75 5~75	6.3~94.5 6.3~94.5
1.6~24 1.6~24	2~30 2~30	2~30 2~30	2.5~37.7 2.5~37.7	3.2~48 3.2~48	4~60 4~60	4~60 4~60	5~75 5~75	6.3~94.5 6.3~94.5
1.6~24 1.656~24	2~30 2~30	2~30 2~30	2.5~37.7 2.5~37.7	3.2~48 3.2~48	4~60 4~60	4~60 4~60	5~75 5~75	6.3~94.5 6.3~94.5
1.725~24 2.07~24	1.725~30 2.07~30	1.725~30 2.07~30	1.725~37.7 2.07~37.7	1.725~48 2.07~48	1.725~60 2.07~60	1.725~60 2.07~60	1.725~75 2.07~75	1.725~94.5 2.07~94.5
1.6~24 1.656~24	2~30 2~30	2~30 2~30	2.5~37.7 2.5~37.7	3.2~48 3.2~48	4~60 4~60	4~60 4~60	5~75 5~75	6.3~94.5 6.3~94.5
2.208~24 2.65~24	2.208~30 2.65~30	2.208~30 2.65~30	2.5~37.7 2.65~37.7	3.2~48 3.2~48	4~60 4~60	4~60 4~60	5~75 5~75	6.3~94.5 6.3~94.5
2.76~24 3.312~24	2.76~30 3.312~30	2.76~30 3.312~30	2.76~37.7 3.312~37.7	3.2~48 3.312~48	4~60 4~60	4~60 4~60	5~75 5~75	6.3~94.5 6.3~94.5
3.45~24 4.14~24	3.45~30 4.14~30	3.45~30 4.14~30	3.45~37.7 4.14~37.7	3.45~48 4.14~48	4~60 4.14~60	4~60 4.14~60	5~75 5~75	6.3~94.5 6.3~94.5

				Circuit breaker	NA1-2000X/NA1-2000XN/NA1-2000XH			
Downstream			Upstream	Rated current (A)	630	800	1000	1250
				Default setting ratings of short time-delay 8In (kA)	5.04	6.4	8	10
				Setting range (kA)	0.63 ~ 9.45	0.8~12	1~15	1.25~18.75
				Delayed tripping time (s)	0.1, 0.2, 0.3, 0.4			
				Returnable time	0.06, 0.14, 0.23, 0.35			
Frame size rated current	**Rated current (A)**	**Instantaneous setting ratings (kA)**						
NM8-630 NM8S-630	250	2.5 3.0(motor)			3.45~9.45 4.14~9.45	3.45~12 4.14~12	3.45~15 4.14~15	3.45~18.75 4.14~18.75
	315	3.15 3.78(motor)			4.347~9.45 5.216~9.45	4.347~12 5.216~12	4.347~15 5.216~15	4.347~18.75 5.216~18.75
	350	3.5 4.2(motor)			4.83~9.45 5.796~9.45	4.83~12 5.796~12	4.83~15 5.796~15	4.83~18.75 5.796~18.75
	400	4.0 4.8(motor)			5.52~9.45 6.624~9.45	5.52~12 6.624~12	5.52~15 6.624~15	5.52~18.75 6.624~18.75
	500	5.0 6.0(motor)			6.9~9.45 8.28~9.45	6.9~12 8.28~12	6.9~15 8.28~15	6.9~18.75 8.28~18.75
	630	6.3 7.56(motor)			8.694~9.45	8.694~12 10.44~12	8.694~15 10.44~15	8.694~18.75 10.44~18.75
NM8S-630	630	6.3 7.56(motor)			8.694~9.45	8.694~12 10.44~12	8.694~15 10.44~15	8.694~18.75 10.44~18.75
	700	7.0 8.4(motor)				9.66~12 11.59~12	9.66~15 11.59~15	9.66~18.75 11.59~18.75
	800	8.0 9.6(motor)				11.04~12	11.04~15 13.25~15	11.04~18.75 13.25~18.75
NM8-1250 NM8S-1250	1000	10 12(motor)					13.8~15	13.8~18.75 16.56~18.75
	1250	12.5 15.0(motor)						17.25~18.75

			NA1-3200X/NA1-3200XN			NA1-4000X	NA1-6300X/NA1-6300XN		
	1600	2000	2000	2500	3200	4000	4000	5000	6300
	12.8	16	16	20	25.6	32	32	40	50.4
	1.6~24	2~30	2~30	2.5~37.7	3.2~48	4~60	4~60	5~75	6.3~94.5
	0.1, 0.2, 0.3, 0.4								
	0.06, 0.14, 0.23, 0.35								
	3.45~24 4.14~24	3.45~30 4.14~30	3.45~30 4.14~30	3.45~37.7 4.14~37.7	3.45~48 4.14~48	4~60 4.14~60	4~60 4.14~60	5~75 5~75	6.3~94.5 6.3~94.5
	4.347~24 5.216~24	4.347~30 5.216~30	4.347~30 5.216~30	4.347~37.7 5.216~37.7	4.347~48 5.216~48	4.347~60 5.216~60	4.347~60 5.216~60	5~75 5.216~75	6.3~94.5 6.3~94.5
	4.83~24 5.796~24	4.83~30 5.796~30	4.83~30 5.796~30	4.83~37.7 5.796~37.7	4.83~48 5.796~48	4.83~60 5.796~60	4.83~60 5.796~60	5~75 5.796~75	6.3~94.5 6.3~94.5
	5.52~24 6.624~24	5.52~30 6.624~30	5.52~30 6.624~30	5.52~37.7 6.624~37.7	5.52~48 6.624~48	5.52~60 6.624~60	5.52~60 6.624~60	5.52~75 6.624~75	6.3~94.5 6.624~94.5
	6.9~24 8.28~24	6.9~30 8.28~30	6.9~30 8.28~30	6.9~37.7 8.28~37.7	6.9~48 8.28~48	6.9~60 8.28~60	6.9~60 8.28~60	6.9~75 8.28~75	6.9~94.5 8.28~94.5
	8.694~24 10.44~24	8.694~30 10.44~30	8.694~30 10.44~30	8.694~37.7 10.44~37.7	8.694~48 10.44~48	8.694~60 10.44~60	8.694~60 10.44~60	8.694~75 10.44~75	8.694~94.5 10.44~94.5
	8.694~24 10.44~24	8.694~30 10.44~30	8.694~30 10.44~30	8.694~37.7 10.44~37.7	8.694~48 10.44~48	8.694~60 10.44~60	8.694~60 10.44~60	8.694~75 10.44~75	8.694~94.5 10.44~94.5
	9.66~24 11.59~24	9.66~30 11.59~30	9.66~30 11.59~30	9.66~37.7 11.59~37.7	9.66~48 11.59~48	9.66~60 11.59~60	9.66~60 11.59~60	9.66~75 11.59~75	9.66~94.5 11.59~94.5
	11.04~24 13.25~24	11.04~30 13.25~30	11.04~30 13.25~30	11.04~37.7 13.25~37.7	11.04~48 13.25~48	11.04~60 13.25~60	11.04~60 13.25~60	11.04~75 13.25~75	11.04~94.5 13.25~94.5
	13.8~24 16.56~24	13.8~30 16.56~30	13.8~30 16.56~30	13.8~37.7 16.56~37.7	13.8~48 16.56~48	13.8~60 16.56~60	13.8~60 16.56~60	13.8~75 16.56~75	13.8~94.5 16.56~94.5
	17.25~24 20.7~24	17.25~30 20.7~30	17.25~30 20.7~30	17.25~37.7 20.7~37.7	17.25~48 20.7~48	17.25~60 20.7~60	17.25~60 20.7~60	17.25~75 20.7~75	17.25~94.5 20.7~94.5

13.2 Selective protection in NA1

				Circuit breaker	NA1-2000X/NA1-2000XN/NA1-2000XH			
Downstream			Upstream	Rated current (A)	630	800	1000	1250
				Default setting ratings of short time-delay 8In (kA)	5.04	6.4	8	10
				Setting range (kA)	0.63 ~ 9.45	0.8~12	1~15	1.25~18.75
				Delayed tripping time (s)	0.1, 0.2, 0.3, 0.4			
				Returnable time	0.06, 0.14, 0.23, 0.35			
Frame size rated current	**Rated current (A)**	**Default instantaneous setting ratings 12In (kA)**						
NA1-2000X	400	4.8			6.348~9.45	6.348~12	6.348~15	6.348~18.75
	630	7.56				9.998~12	9.998~15	9.998~18.75
	800	9.6					12.696~15	12.696~18.75
	1000	12						15.87~18.75
	1250	15						
	1600	19.2						
	2000	24						
NA1-3200X	2000	24						
	2500	30						
	3200	38.4						
NA1-4000X	3200	38.4						
	4000	48						
	4000	48						
NA1-6300X	5000	60						
	6300	75						

Note: It can satisfy the selective protection if only the short time-delay setting value of the superior breaker 1.32 times more than the subordinate breaker, when the instantaneous setting value is adjustive.

		NA1-3200X/NA1-3200XN			NA1-4000X	NA1-6300X/NA1-6300XN		
1600	2000	2000	2500	3200	4000	4000	5000	6300
12.8	16	16	20	25.6	32	32	40	50.4
1.6~24	2~30	2~30	2.5~37.7	3.2~48	4~60	4~60	5~75	6.3~94.5
0.1, 0.2, 0.3, 0.4								
0.06, 0.14, 0.23, 0.35								
6.348~24	6.348~30	6.348~30	6.348~37.7	6.348~48	6.348~60	6.348~60	6.348~75	6.348~94.5
9.998~24	9.998~30	9.998~30	9.998~37.7	9.998~48	9.998~60	9.998~60	9.998~75	9.998~94.5
12.696~24	12.696~30	12.696~30	12.696~37.7	12.696~48	12.696~60	12.696~60	12.696~75	12.696~94.5
15.87~24	15.87~30	15.87~30	15.87~37.7	15.87~48	15.87~60	15.87~60	15.87~75	15.87~94.5
19.837~24	19.837~30	19.837~30	19.837~37.7	19.837~48	19.837~60	19.837~60	19.837~75	19.837~94.5
	25.392~30	25.392~30	25.392~37.7	25.392~48	25.392~60	25.392~60	25.392~75	25.392~94.5
			31.74~37.7	31.74~48	31.74~60	31.74~60	31.74~75	31.74~94.5
			31.74~37.7	31.74~48	31.74~60	31.74~60	31.74~75	31.74~94.5
				39.675~48	39.675~60	39.675~60	39.675~75	39.675~94.5
					50.784~60	50.784~60	50.784~75	50.784~94.5
					50.784~60	50.784~60	50.784~75	50.784~94.5
							63.48~75	63.48~94.5
							63.48~75	63.48~94.5
								79.35~94.5

Intelligent Controller of NA1 series

14 Protection Features of intelligent controller

14.1 M/H and 3M/3H intelligent controller UI

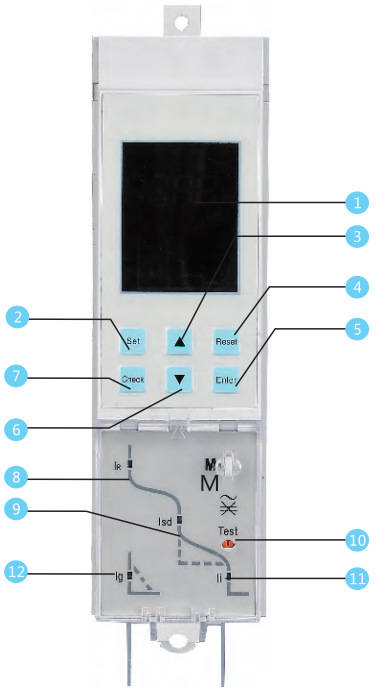

M/H control

3M/3H control

1 Display window
Display current value, setting value, tripping time and so on

2 "Set"
Switch to setting menu

3 "Up"
Change the marquee or the selected parameter

4 "Return"
Escape from this grade and return to upper menu or cancel the current selected parameter

5 "Enter"
Enter into the next menu directed by the current item, or select current parameter and store modifications

6 "Down"
Change the marquee or the selected parameter

7 "Check"
Switch to query menu

8 "Ir" light
Overload long delay fault indication

9 "Isd" light
Short-circuit Short delay indication

10 "Test"
Trip test button

11 "Ii" light
Short-circuit instantaneous fault indication

12 "Ig" light
Asymmetric earthing or neutral line fault indication

13 Alarm light

14 Communication light

15 Run light

Note: Method of 3M/3H controller application please refer to 3M/3H controller instruction.

14.2 3M/3H controller default interface and menu structure

3M/3H controller has four subjects menus and a default interface:

The subjects menus are composed of 4 parts: measurement menu, parameter set menu, protection parameter set menu, history and maintenance menu.

3M/3H controller default interface

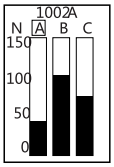

14.3 Explanation of M/H controller symbols

14.3.1 Explanation of symbols for reference

No.	symbol	explanation
1	Ir= tr=	Long delay current setting, long delay time setting
2	Isd= tsd=	Short delay current setting, short delay time setting
3	Ig= tg=	Earthing current setting, earthing time setting
4	Ii=	Instantaneous current setting
5	N=	Neutral line protection parameter setting
6	TM	Trip simulated by software
7	TRIP	Tripped
8	RUN	Run normally
9	SET	Normally on: in settable state; Flickering: modifiable parameter
10	LIN	Storing state
11	P┣0	Protection setting interface
12	ΓES	Trip simulated by software setting interface
13	RLR	Alarm setting or query interface
14	SYS	System setting interface (current calibration , frequency setting ...)
15	DBS	Communication setting interface of H-type controller
16	DOS	DO setting interface (H type with DO function)
17	FRU	Fault record query interface
18	COU	Operation times and life query interface
19	HDΓ	Thermal capacity query interface
20	DOC	DO state query interface
21	H	Thermal capacity data
22	F--	Fault record number
23	R--	Alarm record number
24	Lg L1 L2 L3 LN	Earthing ,A,B,C,N phase
25	L ⌞	The corresponding LED lamp will flash to indicate the fault type after tripping. The LED lamps are always on when the system is normal.

14.3.2 Operation and display instruction

There are four states, default state, setting state, query state and tripping state.

① Default state: default state is also called measuring state. All fault indicating lamps are off and maximum phase current is displayed. In this state, if "▲" or "▼" button is pressed, L1,L2,L3(LN),Lg current can be displayed in turn.

Example is shown below:

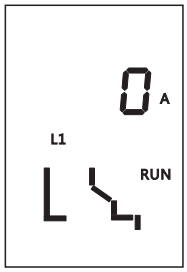

L1 phase current display interface

②Setting state: press "Set" button in default interface to enter into setting interface. Current protection parameters, overload pre-alarm value, earthing alarm threshold value and delay time can be queried or changed in setting state. Tripping can be simulated by software. In this state, "▲" or "▼" button can be pressed to add or subtract value when "SET" indicating lamp is flickering. Don't forget to press "Enter" button to save data after setting.
Example 1 of changing long delay time is shown below:

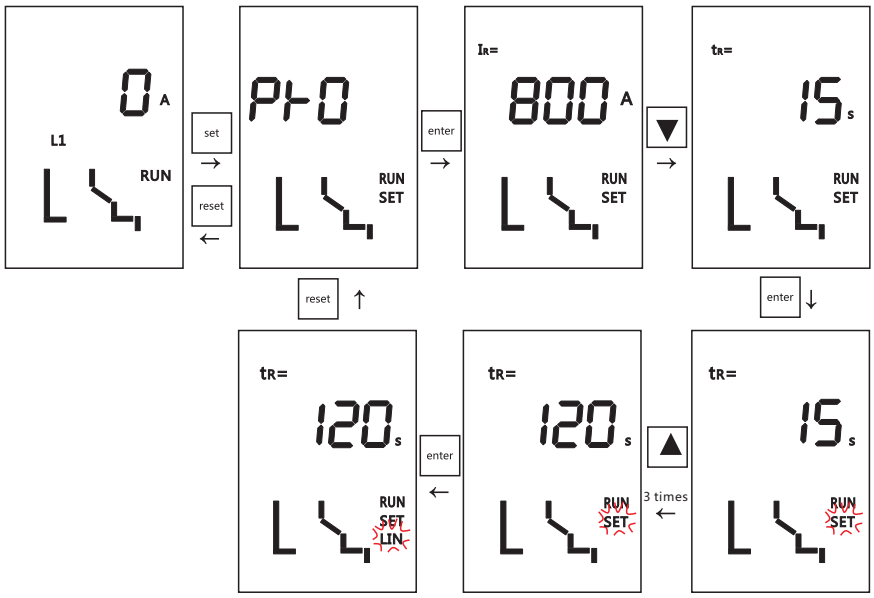

Example 2 of short delay tripping simulated by software is shown below:

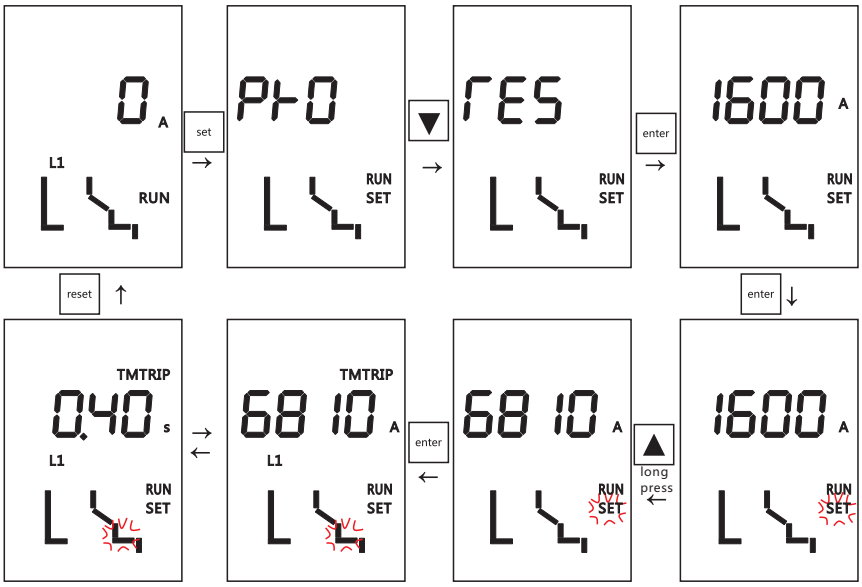

Example3 of setting earthing alarm threshold current is shown below:

③Query state: press "Check" button in default interface to enter into query interface. Last 8 fault records, last 8 alarm records, breaker operation times, life record and thermal capacity can be queried in query state.
Example4 of querying second fault record is shown below:

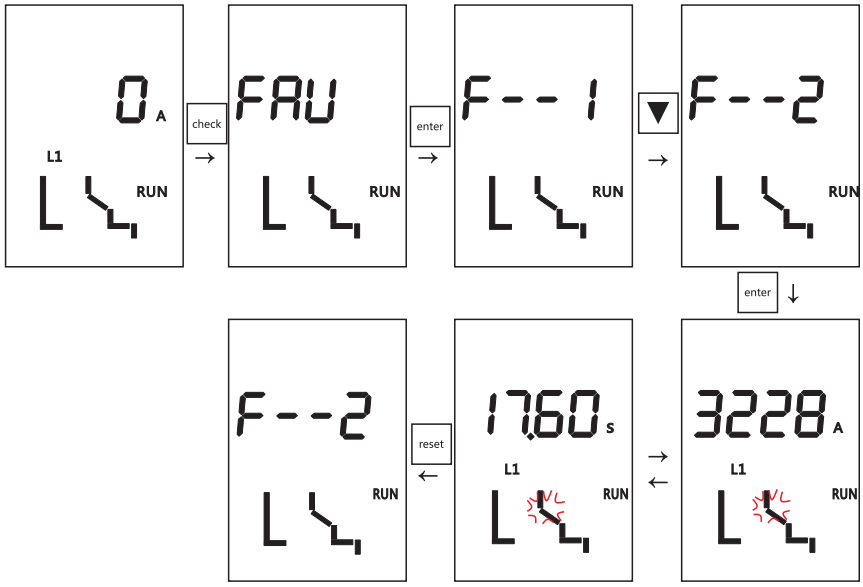

Example5 of querying first alarm record is shown below:

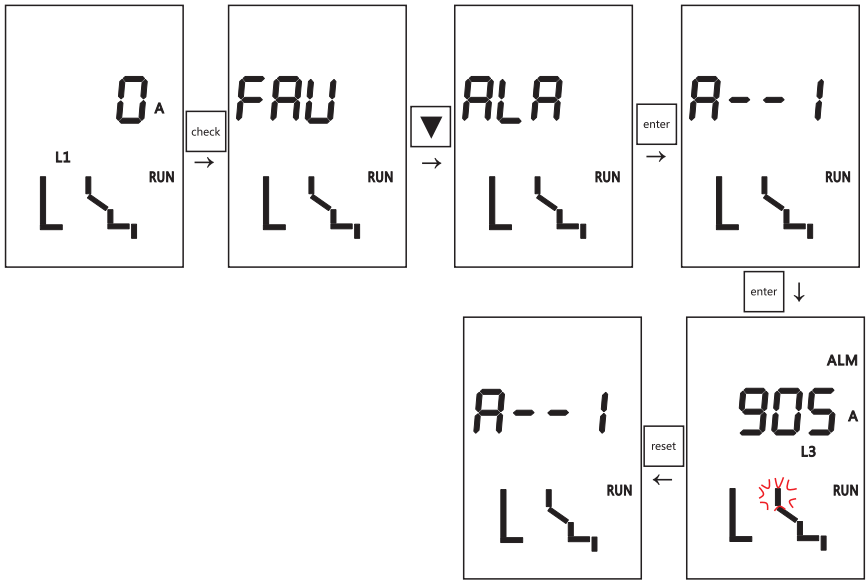

Example6 of querying breaker operation times and life record is shown below:

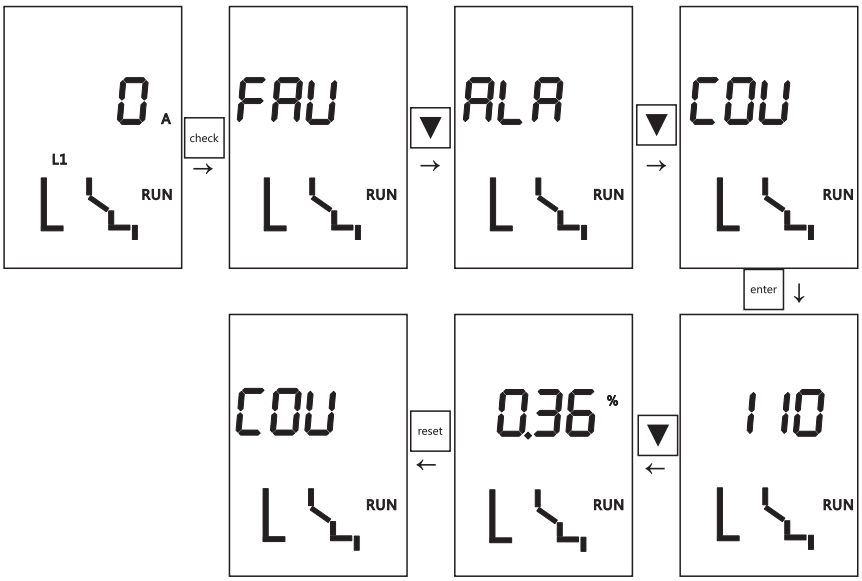

Example7 of querying thermal capacity after tripping is shown below:

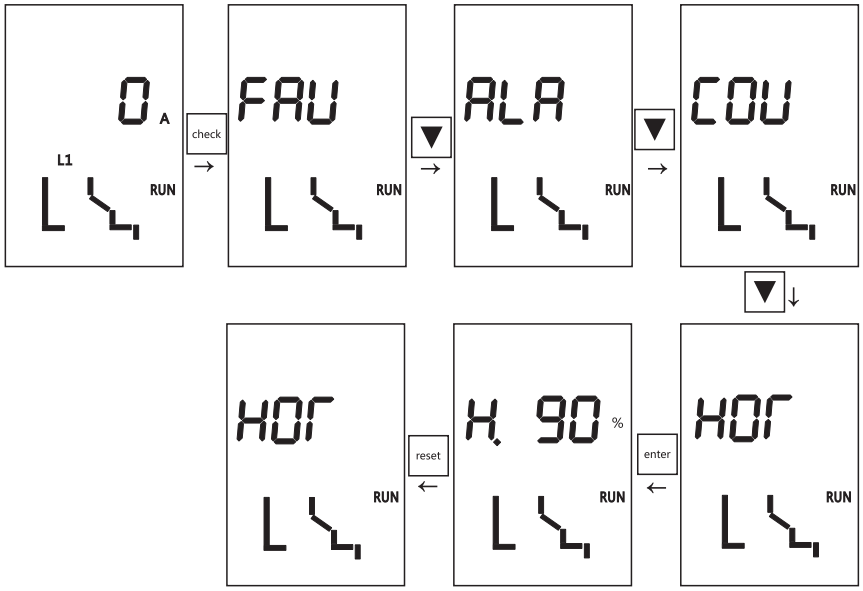

④Tripping state: "Reset" button should be press to return default interface after tripping at fault.

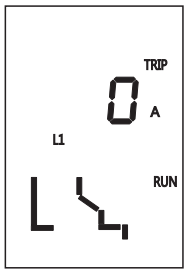

Press "Test" button to simulate Instantaneous trip

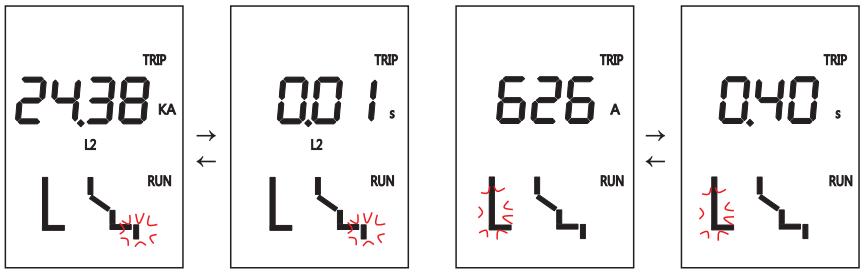

Instantaneous trip state

Earthing trip state

14.3.3 Controller functions list

M type	H type
1 over-current protection (overload, short delay, instantaneous, earthing); vector sum grounding mode. 2 Neutral line protection 3 Current measurement 4 two test functions: (1)Instantaneous trip test simulated by mechanical button (2)Other trip tests simulated by software 5 Ten fault records 6 Ten alarm records 7 MCR protection 8 operation times records 9 thermal capacity 10 overload pre-alarm	1 over-current protection (overload, short delay, instantaneous, earthing); vector sum grounding mode. 2 Neutral line protection 3 Current measurement 4 two test functions: (1)Instantaneous trip test simulated by mechanical button (2)Other trip tests simulated by software 5 Ten fault records 6 Ten alarm records 7 MCR protection 8 operation times records 9 thermal capacity 10 overload pre-alarm 11 communication function: MODBUS protocol 12 four DO function (optional)

3M type	3H type
1 all functions of M-type controller are included 2 HMI:128*64 LCD	1 all functions of 3M-type controller are included 2 voltage measurement and protection 3 frequency measurement and protection 4 power measurement and protection 5 electric energy, power-factor, harmonic measurement 6 communication function: MODBUS protocol 7 DI/DO function

14.4 specifications of characteristics

14.4.1 Over-current protection characteristic curve

Over-current protection characteristic curve

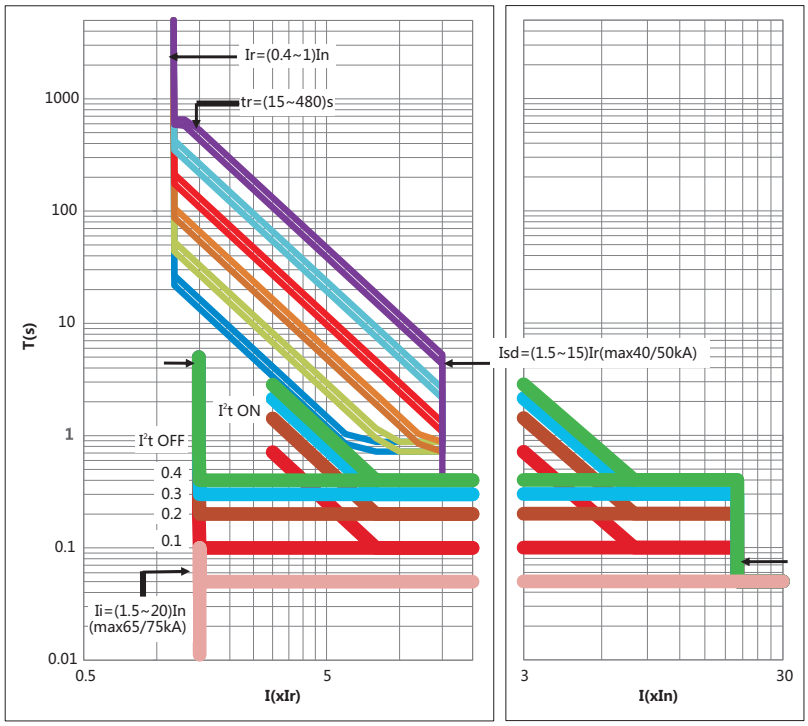

14.4.2 Overload long time-delay protection

Operating characteristics

Current Ratings Range(Ir)	tolerance	Current	Action time(s)						Time tolerance
(0.4~1)In+ OFF	±10%	≤1.05Ir	>2h Non-trip						
		> 1.3Ir	<1h trip						
		1.5Ir(setting time)	15	30	60	120	240	480	±10%
		2.0Ir	8.4	16.9	33.7	67.5	135	270	±10%
Phase N Overload and Over-Current Characteristic			100% or 50%(Applicable to 3P+N or 4P)						

14.3 Short-circuit short-delay protection

Short-circuit short delay protection has two protection modes. One is inverse time and definite time protection. $I^2Tsd= (8Ir)^2tsd$ works when current is low. In this formula, I is actual current, Tsd is actual trip time, tsd is set trip delay time. When I is over inverse time set value but below 8Ir, controller will operate according to over-current protection characteristic curve. When I is over both of inverse time set value and 8Ir, controller will operate according to definite time protection. The other is definite time protection and set time is 0.11s, 0.21s, 0.31s, and 0.41s. When I is over Isd but below Ii, controller will operate according to definite time protection.

Operating characteristics

Current Ratings Range(Isd)	tolerance	Current	Action time(s)				Time tolerance
(1.5~15)Ir+ OFF	±10%	≤0.9Isd	In the 2tsd Non-trip				
		> 1.1Isd	In the 2tsd Delayed-trip				
		tsd	0.1	0.2	0.3	0.4	±15%
		Returnable time	0.06	0.14	0.25	0.33	±15%

Note: a. When the intelligent controller is FrameⅡ (Inm=3200A、4000A), Isd shouldn' t be more than 40KA.
b. When the intelligent controller is FrameⅢ (Inm=6300), Isd shouldn' t be more than 50KA.
c. When tsd is 0.1s or 0.2s, time permissible error is ±0.040s.

14.4.4 Short-circuit instantaneous protection

Instantaneous protection trip time should be less than 100ms.

Operating characteristics

Current Ratings Range(Ii)	tolerance	Current	Time tolerance
(1.5~20)In+ OFF	±15%	≤0.85Ii	In the 0.2s Non-trip
		> 1.15Ii	In the 0.2s trip

Note: a. When the intelligent controller is Frame Ⅰ (Inm=2000A), Ii shouldn' t be more than 50KA.
b. When the intelligent controller is FrameⅡ (Inm=3200A、4000A), Ii shouldn' t be more than 65KA.
c. When the intelligent controller is FrameⅢ (Inm=6300), Ii shouldn' t be more than 75KA.

14.4.5 Earthing protection

Earthing protection has definite time characteristic. Fault delay time is shown below.

Earthing protection characteristic curve

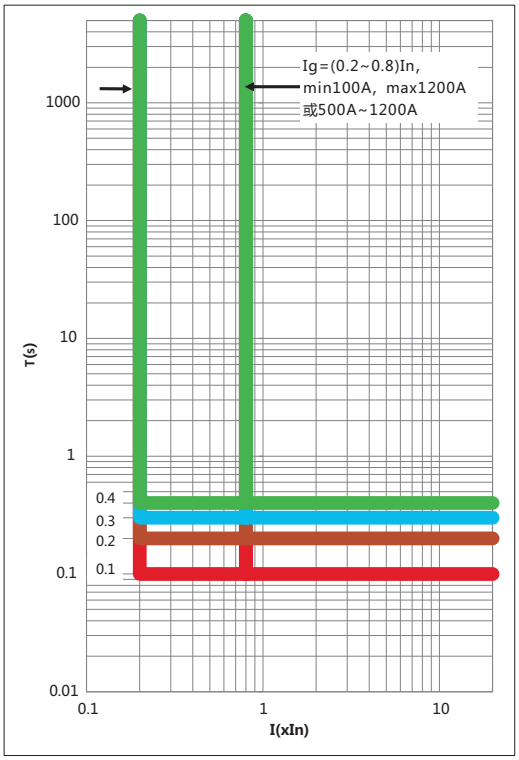

Operating characteristics of single-phase earthing protection

Current Ratings Range(Ig)	tolerance	Current	Action time(s)				Time tolerance
Inm=1000/2000 , (0.2~0.8)In+ OFF Inm=3200/4000/6300, (500~1200)A+ OFF	±10%	≤0.9Ig	In the 2tg Non-tripping				
		＞1.1Ig	In the tg±0.032s or tg(1±25%) Tripping				
		tg	0.1	0.2	0.3	0.4	±15%
		Returnable time	0.06	0.14	0.25	0.33	±15%

Note: a. When tg is 0.1s or 0.2s, time permissible error is ±0.040s;
b. When Inm is 1000A, Ig should be more than 100A. When Inm is 2000A, Ig shouldn' t be more than 1200A.
c. When Inm is 3200A, 4000A or 6300A, Ig should be between 500A and 1200A.

Single-phase protection is usually used in neutral-point solid ground system. Controller has two different protection modes, being vector sum mode and external transformer mode.

In three-phase three-wire system using 3-pole breaker without external transformer, earthing fault signal comes from three- phase current vector sum. Operating characteristic is definite time protection.

3PT mode

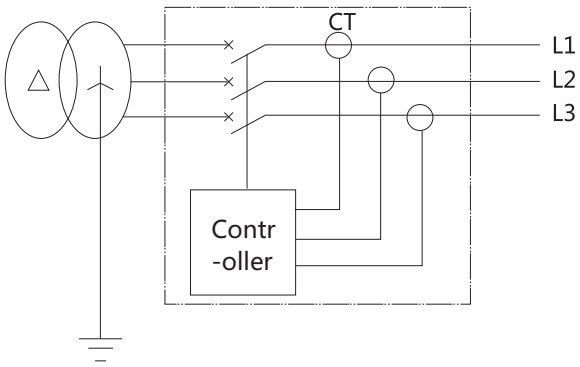

In three-phase four-wire system using 4-pole breaker without external transformer , earthing fault signal comes from three- phase current and N-Pole current vector sum. Operating characteristic is definite time protection.

4PT mode

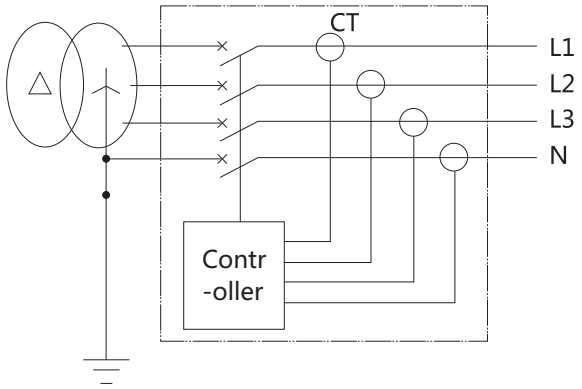

In three-phase four-wire system using 3-pole breaker with external N-pole transformer, earthing fault signal comes from three- phase and N-Pole current vector sum. Operating characteristic is definite time protection.

(3P+N)T mode

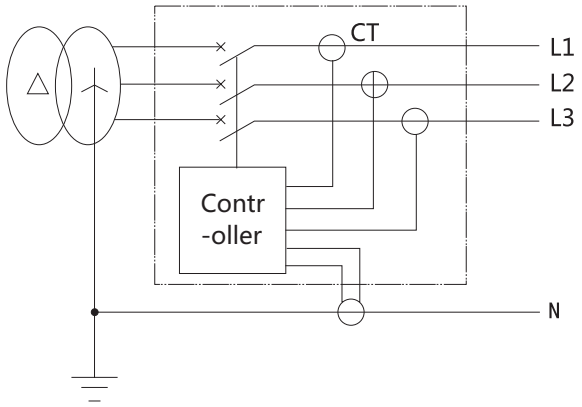

Note:

① External N-pole transformer (connected to 6#, 7# terminal for NA1-1000, connected to 25#, 26# terminal for NA1-2000-6300) is a special product. Default lead wire is 2 meters long.

② Earthing protection in 3PT mode can only be used in balance load. It should be turned off or set value above allowable unbalance current when the load is unbalance or the controller may operate.

③ The distance between external transformer and breaker should be less than 5m in (3P+N)T mode. When lead wire of external transformer needs to be longer than 2 meters, special requirement should be noted when ordering.

15. Accessories

15.1 Under-voltage release

Without power supply, under-voltage release can't close.

It is classified into instantaneous and time-delay type.

Delay time 1s, 3s, 5s, 7s are fixed for NA1-1000; 1s, 3s, 5s are fixed for NA1-2000, 3200, 4000, 6300.

Within 1/2 time-delay range, circuit breaker does not trip when power voltage recovers and exceeds 85%Ue.

Characteristic

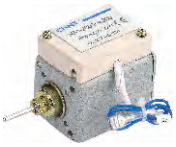

Type	NA1-1000X	NA1-2000X/NA1-2000XN/NA1-2000XH/NA1-3200X/NA1-3200XN/NA1-4000X/NA1-6300X/NA1-6300XN	
Rated control power voltage Us(V)	**AC230, 400**	**AC400, 230, 127**	**DC220, 110**
Action voltage(V)	(0.35-0.7)Us		
Reliable making voltage(V)	(0.85-1.1)Us		
Reliable non-making voltage(V)	≤0.35Us		
Power loss(W)	20VA	48VA	48W

Optional configure: Auto suction type under-voltage release, and this device can substitute normal one, it can prevent mechanism form misoperation.

Make sure there is power supply on the under-voltage release, before making the circuit breaker.

C

15.2 Shunt release

Shunt release can realize the remote control to break the circuit breaker.

Characteristic

Type	NA1-1000X		NA1-2000X/NA1-2000XN/NA1-2000XH/NA1-3200X/NA1-3200XN/NA1-4000X/NA1-6300X/NA1-6300XN		
Rated control power voltage Us(V)	**AC230, 400**	**DC220, 110**	**AC400, 230, 127**	**DC220, 110**	
Work voltage	(0.7-1.1)Us				
Power loss	56VA	250W	300VA	132W	70W
Breaking time	(50±10)ms	(50±10)ms	(30~50)ms	(30~50)ms	

Forbid making the power for long time to avoid the shunt release being damaged.

15.3 Closing electromagnet

After the motor finishing the energy storage, closing release can instantly close the circuit breaker.

Characteristic

Type	NA1-1000X		NA1-2000X/NA1-2000XN/NA1-2000XH/NA1-3200X/NA1-3200XN/NA1-4000X/NA1-6300X/NA1-6300XN		
Rated control power voltage Us(V)	**AC230, 400**	**DC220, 110**	**AC400, 230, 127**	**DC220, 110**	
Work voltage	(0.85-1.1)Us				
Power loss (W)	56VA	250W	300VA	132W	70W
Closing time	(50±10)ms	(50±10)ms	≤70ms	≤70ms	

Forbid making the power for long time to avoid the closing release being damaged.

15.4 Motor-driven energy-storage mechanism

With the function of motor-driven energy storing and auto restoring energy after closing the circuit breaker, the mechanism can ensure closing the circuit breaker instantly after breaking the circuit breaker.

Manual energy-store is available.

Characteristic

Type	NA1-1000X		NA1-2000X/NA1-2000XN/NA1-2000XH/NA1-3200X/NA1-3200XN/NA1-4000X/NA1-6300X/NA1-6300XN	
Rated control power voltage Us(V)	**AC230, 400**	**DC220, 110**	**AC400, 230, 127**	**DC220, 110**
Work voltage	(0.85-1.1)Us			
Power loss (W)	90W	90W	85/110/150W	85/110/150W
Closing time	≤5s	≤5s	≤5s	≤5s
Energy-storage time				
Operation frequency				

15.5 Auxiliary contact NO

Standard model: 4NO(normal open)/4NC(normal close) and 6NC(normal close).

Characteristic

Type	NA1-1000X			NA1-2000X/NA1-2000XN/NA1-2000XH/NA1-3200X/NA1-3200XN/NA1-4000X/NA1-6300X/NA1-6300XN		
Rated voltage (V)	**AC230**	**AC400**	**DC220**	**AC230**	**AC400**	**DC220**
conventional free-air thermal current Ith (A)	10	6	0.5	6	6	6
Rated control capacity	300VA	100VA	60W	300VA	300VA	60W

NA1-1000X			NA1-2000X/NA1-2000XN/NA1-2000XH/NA1-3200X/NA1-3200XN/NA1-4000X/NA1-6300X/NA1-6300XN		
Category	**Voltage**	**Current**	**Category**	**Voltage**	**Current**
AC-15	AC230V	1.3A	AC-15	AC230V	1.3A
	AC400V	0.25A		AC400V	0.75A
DC-13	DC110V	0.55A	DC-13	DC110V	0.55A
	DC220V	0.27A		DC220V	0.27A

15.6 Doorcase

Installed on the door of the distribution cubicle, for sealing the distribution cubicle and making the protection class to IP40(fixed type and drawout type).

15.7 Phases barrier (Optional)

Installed between the busbars to increase the creepage distance.

15.8 Transparent shield (NA1-2000) (Optional)

Installed on the doorcase of the cubicle's small door, make the protection class to IP54. It is suitable for the fixed, drawout type circuit breaker and the load switch.

15.9 Off position locking mechanism

When the circuit breaker is disconnected, padlock can be used to lock it after pulling out the lock lever, then the circuit breaker can't be "Test" or "connected" position.(Padlock is prepared by users)

15.10 Key lock

Lock the circuit breaker on the OFF position, then the circuit breaker can't be closed.

Locks and keys will be provided by us.

Separate lock and key is matched with one set of the circuit breaker.

Three same locks and two same keys are matched with three circuit breaker.

Note: Before pulling out the key, the break pushbutton should be pressed first, rotate the key anticlockwise, then pull it out.

★ NA1Install the locking system

1. Components of the locking system:

2. Installation sequence:

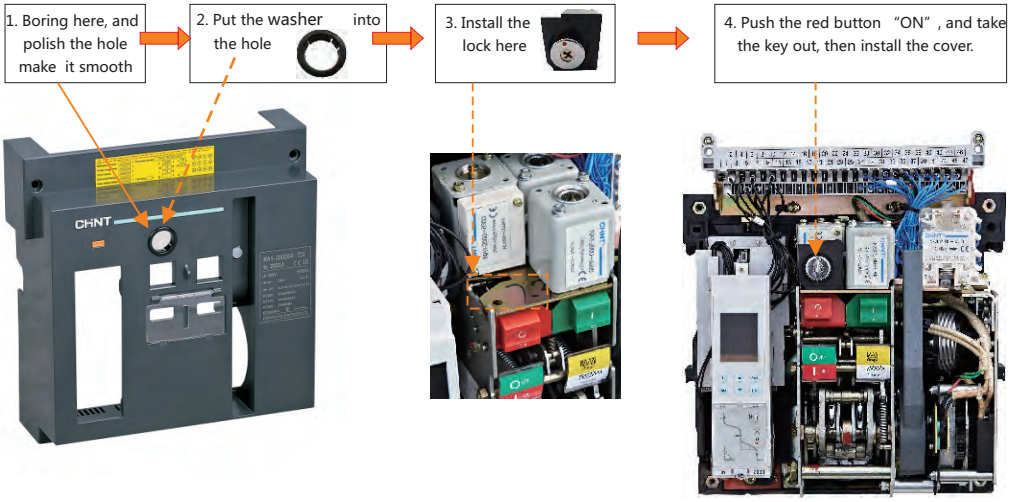

15.11 Cable mechanical interlock

It can realize the interlock of two horizontal or vertical-installed, three poles or four poles , drawout type or fixed type circuit breaker.

a. If need bend the cable, make sure the radian is more than 120°.

b. Check and make sure enough lubricating oil of the cable.

c. The maximum distance between two interlock circuit breakers is 1.5m.

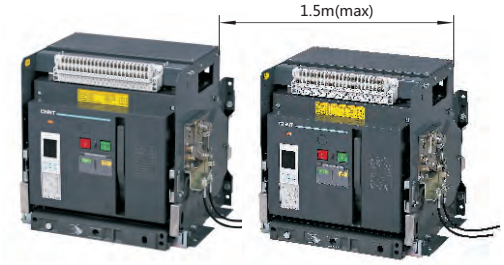

Circuit diagram

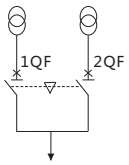

Available running manner

1QF	2QF
0	0
0	1
1	0

Notes: a. when the steel cable needs to be bent, enough transition arc should be reserved to guarantee flexible movement of steel cable;
b. check the steel cable and make sure there is enough lubricant in the steel cable to guarantee flexible movement of steel cable.

15.12 Connecting-rod type mechanical interlock

Two vertical-installed three-poles or four-poles, drawout-type or fixed type circuit breakers realize the interlock between one breaker with another two different-state breakers.

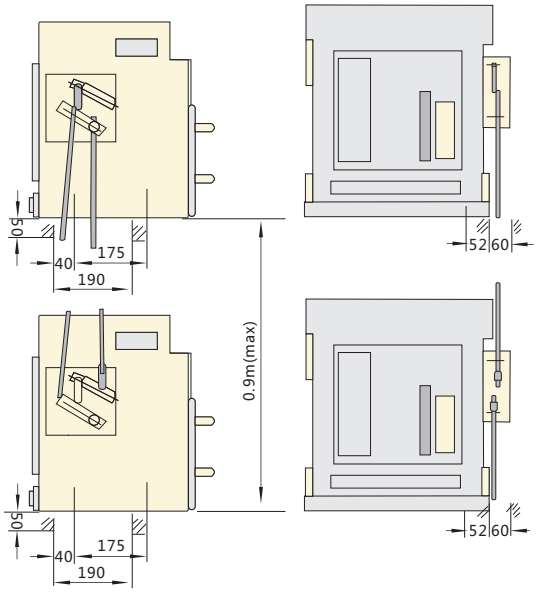

Circuit diagram

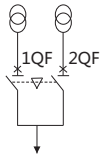

Available running manner

Manner 1: three power supplies are provided for one circuit breaker only

1QF	2QF
0	0
0	1
1	0

16. Maintenance and Overhaul of Circuit Breaker

Safety Precautions

The following operations must be executed in turn before conducting the maintenance or overhaul of circuit breakers:

a. Circuit breaker opening operation to ensure the circuit breaker is in an opening state;

b. Disconnecting the upper-level knife switch (if any) to ensure the main circuit and secondary circuit are uncharged;

c. Circuit breaker discharging, opening operation to ensure the circuit breaker is in a discharging and opening state;

d. The components which the personnel might contact must be uncharged.

Keep Safe

Maintenance and overhaul cycle

Condition	Environment	Maintenance cycle	Overhaul cycle	Remarks
General environment	The air should be always kept clean and dry. There is no corrosive gas. The temperature is in between -5℃~+40℃ The humidity should conform to Specification 1.3 Operating Conditions c Requirement for extreme atmosphere conditions.	Every six months	Once per year (every six months for more than 3 years of mounting period)	Confirming to IEC60947-2 Requirement for general environmental conditions.
Severe environment	Low temperature -5℃~-40℃ or high temperature 40℃ ~ 65℃ or humidity≥90%	Every three months	Every six months (every three months for more than 3 years of mounting period)	
	Places with more dust and corrosive gases	Every month	Every three months	

16.1 Maintenance of circuit breaker

16.1.1 Foreign objects (such as tools, wire leads or fragments, metal objects) in the switchgear should be regularly cleared.

16.1.2 The dust on the circuit breaker must be regularly cleared to maintain its good insulation.

16.1.3 The spring washers of the main circuit connecting bolts , the earthing bolts must be checked for whether they are flattened and theconnection is firm.

16.1.4 Whether the opening or closing indication is correct and reliable.

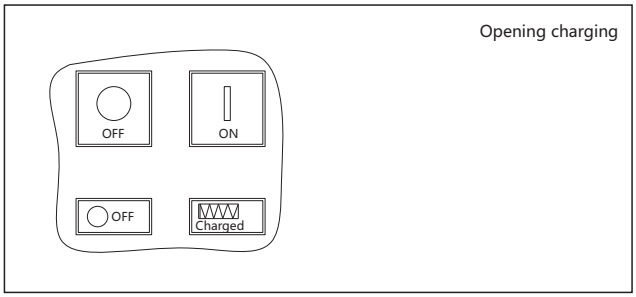

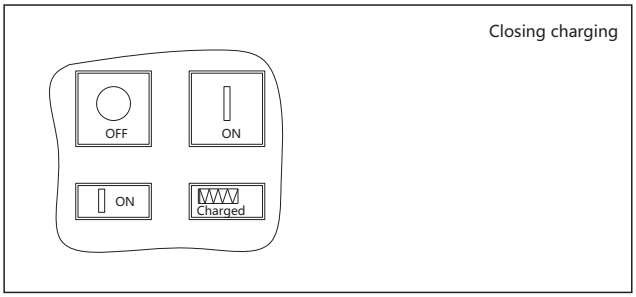

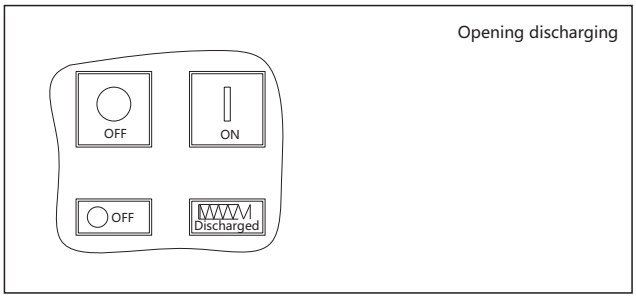

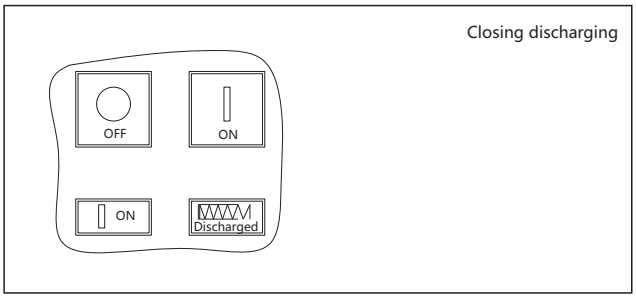

16.2 Overhaul of circuit breaker

16.2.1 Connecting and mounting inspection

It is proposed to refer to the following requirement for the torsional forces of main circuit and secondary circuit.

Fastener specification	Torque requirement N·m
M3	0.5~0.7
M4	1.2~1.7
M8	16~26
M10	36~52
M12	61~94

16.2.2 Insulating property test

The phase-phase and phase-earth insulation resistance, requirement≥20MΩ.

The insulation resistance test must be first done after overhaul and long-time（≥7days）of deenergization and before energization again.

16.2.3 Operating characteristic inspection

All accessories shall be connected with corresponding rated voltage according to the face shield nameplate requirement, and the following operations should be done:

Electric charging, closing and opening operation, 5times in cycle

Manual charging, closing and opening operation, 5times in cycle

The circuit breaker charging, opening and closing should be normal.

Note: The main circuit must be uncharged. If there is an under-voltage release, the rated voltage must be first connected.

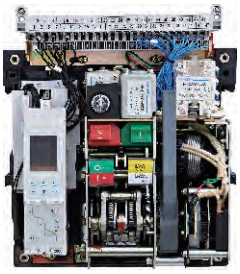

Note: The picture takes NA1-2000X as an example

16.2.4 Inspection of circuit breaker components

16.2.4.1 Face shield dismantling

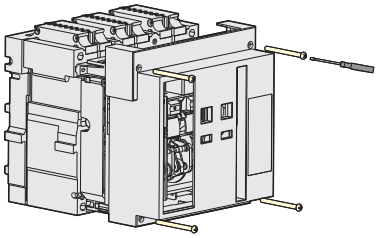

- Remove four bolts of circuit breaker fixed panel and take off the face shield.

Note: The picture takes NA1-2000X as an example.

16.2.4.2 Operating mechanism inspection

The mechanism components should be free of fracture and damage, and the fasteners are fastened.

Clear the dust and evenly apply oil onto the rotating components.

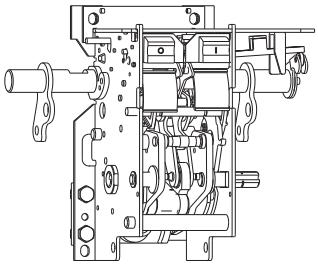

- Evenly apply 7012 low-temperature lubricating grease or lubricate same using the similar solid grease onto the mechanism rotating positions.

Note: The picture takes NA1-2000X as an example.

16.2.4.3 Intelligent controller (taking NA1-2000 type M type controller as an example)

Parameter setting should conform to the site use requirement.

Simulated test tripping function

- 1. Press the "Set" button to enter the parameter setting interface "Pro".
- 2. Press the "Enter" button to enter the protective parameter setting and query interface.
- 3. Press the "▲" or "▼" button to in turn select the display of protective parameter setting details.
- 4. Press the "Reset" button to return to the upper-level menu or exit from the interface.

• Press the "Test" button to simulate the tripping test.

• Press the orange "Reset" button on the face shield to return to normal state.

16.2.4.4 Drawer set inspection (conduct the test after removing the body, taking NA1-2000X as an example)
There are no foreign objects inside.

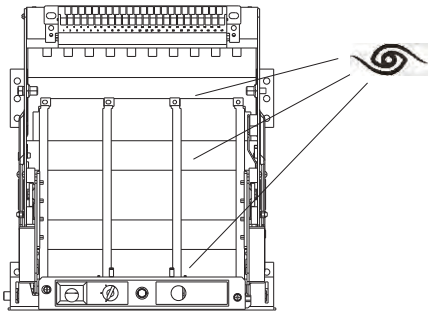

• Observe whether there are foreign objects inside the draw-out socket, like screws, wire leads, scrap iron; please clear same if any.

The flash barrier opening or closing is normal, and the spacing contact has no deformation or oxidization.

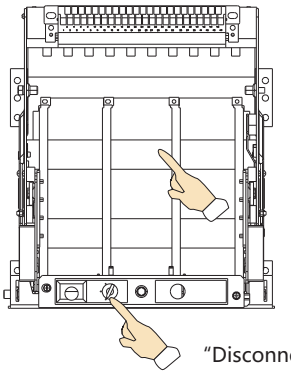

- Rotate to the "Disconnected" position, and the flash barrier is shown as the left figure.

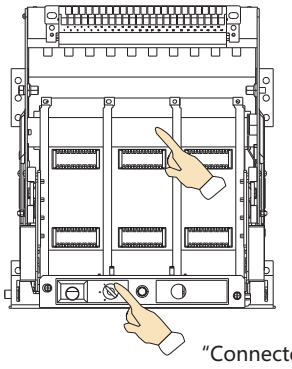

- Rotate NA1-2000X~6300X to the Connected position.
- Press down NA1-1000X separator and open the connecting rod. The flash barrier is shown as the left figure. Observe whether each phase bridge contacts are deformed, misplaced or oxidized. If any, replace same.

Rotate the friction positions and apply oil evenly.

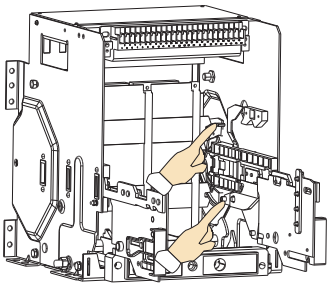

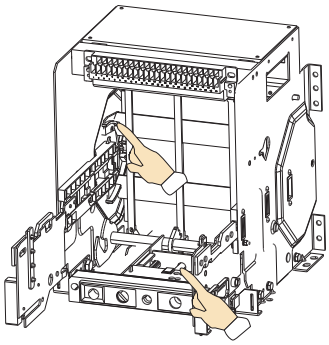

- Evenly apply 7012 low-temperature lubricating grease or similar solid grease onto the positions indicated in the left figure.

16.2.4.5 Arcing Chamber (taking NA1-2000X~6300X as an example)

Each arc and arcing chambers are not broken. If any, please promptly replace same and clear inside dust, corrosion layer and arc discharge point. In case of serious corrosion or rust, please promptly conduct replacement.

Note: Inspection must be done after short-circuit current breaking.

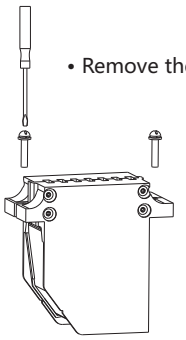

- Remove the fixing bolts

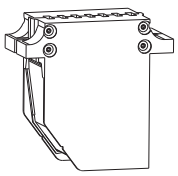

- Take out the arc chamber.

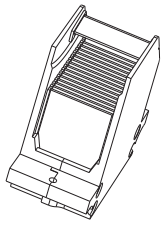

- Check chamber conditions.

16.2.4.6 Required main contact (taking NA1-2000X~6300X as an example) over-travel≥2mm.

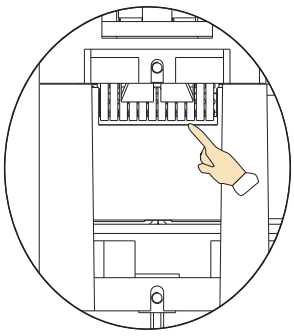

• Conduct manual closing operation, and observe the main contact over-travel.

Note: Please replace the contact if it reaches the position shown.

Clear dust, corrosion layer and particle burnt objects.

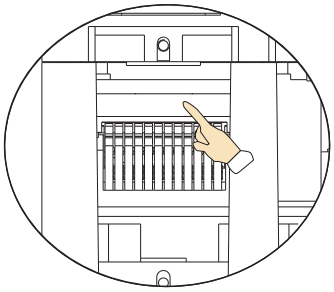

• Close the product and main contact is at the shown position. Observe any dust, particle burnt objects and oxidized corrosion layer of dynamic and static contacts. If any, please promptly clear same.

Note: Inspection must be done after short-circuit current breaking.

16.2.4.7 Secondary circuit inspection

No shell damage.

Inspect the contact between the draw-out body secondary circuitand drawer set secondary circuit using the multimeter. At the "Test" or "Connection" position, the contacts are in good contact , and the connecting screws are fastened , and the conductor insulation has no damage.

16.3 Replacement of undervoltage release, shunt release and closed electromagnet accessories. The following operations must be executed before replacing the accessories.

Cut off all power supplies and ensure the main circuit and secondary circuit power supplies are uncharged. The circuit breakers are in the discharging opening state.

16.3.1 Replacement of fixed accessories

Remove the panel fixing bolts and dismantle the panel.

Untie the tape and remove the connecting conductor.

Remove the fixed accessory mounting screws.

Dismantle the accessories and replace same.

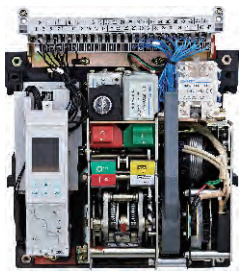

Note: The shunt release should be first dismantled before replacing the NA1-2000 undervoltage release.

16.3.2 Replacement of draw-out accessories

Rotate the body to the detachment position and remove the body.

Remove the panel fixing bolts and dismantle the panel.

Untie the tape and remove the connecting conductor.

Remove the fixed accessory mounting screws.

Dismantle the accessories and replace same.

Note: The shunt release should be first dismantled before replacing the NA1-2000 undervoltage release.

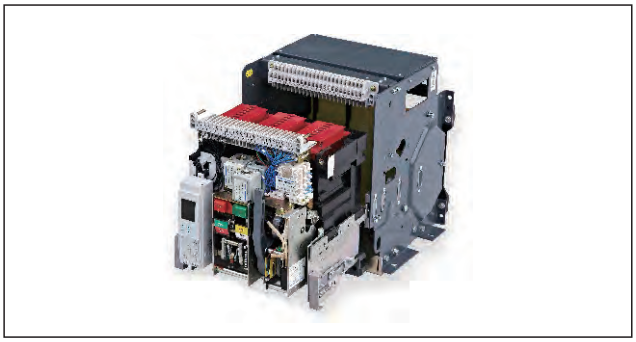

17. Common Failure Causes and Solutions

17.1 Troubleshooting logic

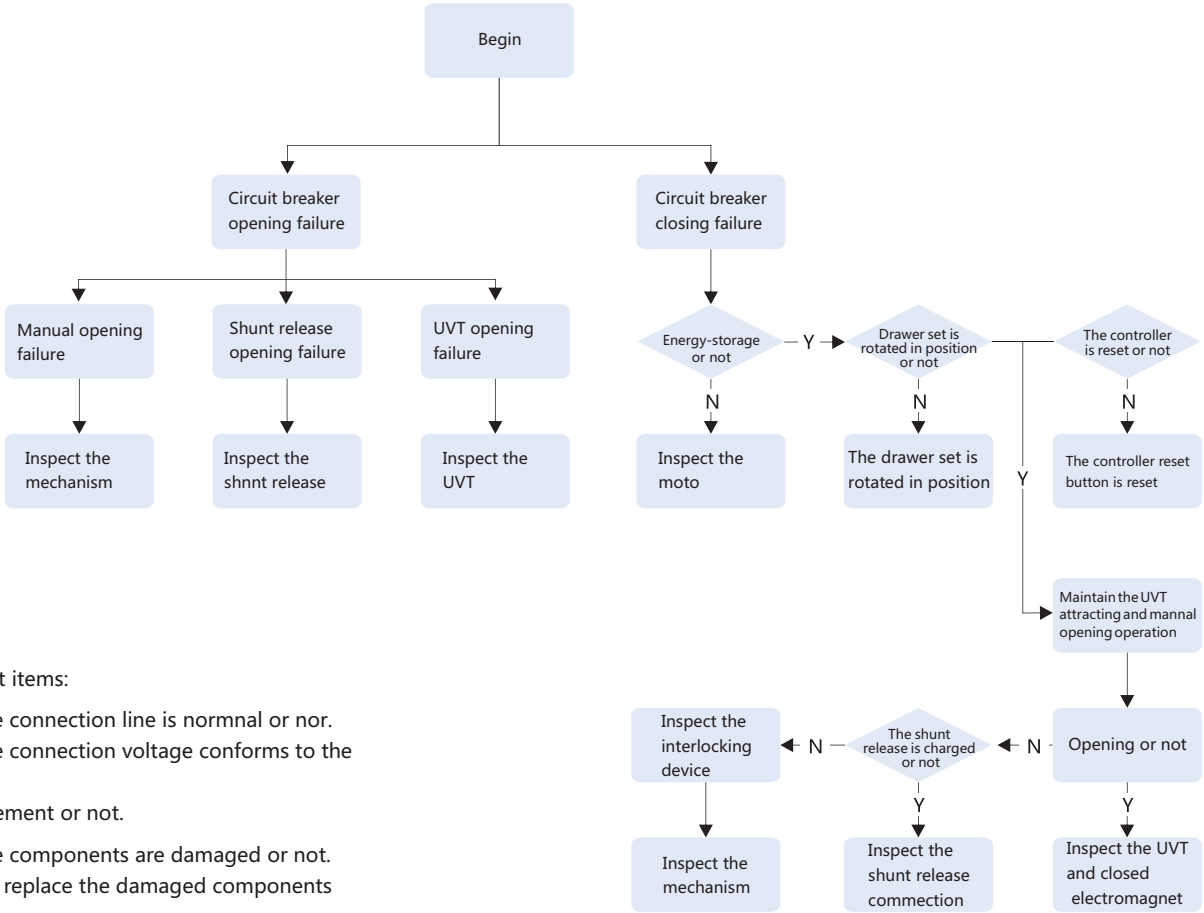

Inspect items:

1、The connection line is normnal or nor.

2、The connection voltage conforms to the requirement or not.

3、The components are damaged or not. please replace the damaged components

17.2 Faulty tripping analysis (taking NA1-2000X M as an example)

Failure cause identification

The failures are identified through the intelligent controller indication..

• Presss the "Reset" button till it returns to the default display interface.

• Press the "Check" button to enter the query menu interface; Press the "Enter" button to enter the failure query menu interface; press the "▼" and select the failure record frequency to be viewed, and press the "Enter" button again to query the failure details.

• Presss the "Reset" button to exit from or return to the upper-level menu.

Note: The electrical closing operation is forbidden before troubleshooting.

18. Regular malfunction and solutions

Fault description	Reasons analysis	Maintenance method
Tripping of circuit breaker	Over load tripping (Ir indicator flashing)	1. Check the breaking current value and operation time of intelligent release. 2. Analyze the load and electric network, exclude the overload if it happens. 3. Match the actual operating current with long time-delay current setting value. 4. Press the reset button to reclose the breaker
	Short circuit tripping ("Isd" or "Ii" indicator flashing)	1. Check the breaking current value and operation time of intelligent release. 2. Exclude the short circuit fault if it happens 3. Check the setting value of intelligent release 4. Check the normal state of breaker 5. Press the reset button to reclose the breaker
	Earthing fault tripping (IG indicator flashing)	1. Check the breaking current value and acting time of intelligent release. 2. Exclude the earthing fault if that happens. 3. Match the fault current setting value with the actual protection. 4. Press the reset button to reclose the breaker.
	Under-voltage release fault: 1. Rated working voltage is less than 70%Ue 2. Fault of control unit	1.Check the power is on or not 2.Check the power voltage of under-voltage release, it shouldn't be less than 85%Ue. 3.Replace the control unit of under-voltage release
	Mechanical interlock acting	Check the working state of two circuit breakers fixed with mechanical interlock
The breaker can't be closed	Intelligent release don't reset (panel is raised)	Press the reset button to reclose the breaker
	Secondary circuit of drawerout-type breaker isn't connected	Make the breaker to "making" position ("click" sound will be heard)
	Breaker hasn't stored energy	Check the secondary circuit: 1. Power voltage of motor shouldn't less than 85%Ue. 2. Check the storage mechanism, replace it if necessary.
The breaker can't be closed	Mechanical interlock acting leads to locking of breaker	Check the working state of two circuit breakers fixed with mechanical interlock
	Closing electromagnet: 1.Rated control voltage is less than 85%Us; 2.Closing electromagnet is damaged	1. Power voltage of closing electromagnet shouldn't less than 85%Us. 2. Replace the electromagnet.
Tripping after closing the circuit breaker (Fault indicator flashing)	Tripping immediately: 1. Short circuit current is closed 2.Delay tripping because of transient current is high when closing; 3. Overload current is closed	1. Check the breaking current value and operation time of intelligent release; 2. Exclude the short circuit fault if it happens; 3. Exclude overload fault 4. Check the normal state of breaker 5. Modify the current setting value of intelligent release 6. Press the reset button to reclose the breaker
Circuit breaker can't be opened	The breaker can't be opened manually 1. There is fault with mechanical operating mechanism	1. Check the mechanism, if there is fault happened.
	The breaker can't be opened by motor remotely 1. There is fault with mechanical operating mechanism 2. Power voltage of shunt release is less than 70%Us; 3. Shunt release is damaged	1. Check the mechanism, if there is fault happened. 2. Check the Power voltage of shunt release is less than 70%Us or not 3. Replace shunt release

Fault description	Reasons analysis	Maintenance method
Circuit breaker can't store energy	Manual storage can't be realized	Mechanical fault with the energy-storage device
	Motor storage can't be realized 1. Power voltage of motor energy-stored device is less than 85%Us; 2. There is mechanical fault with energy-storage device	1. Power voltage of motor energy-stored device shouldn't less than 85%Us 2. Mechanical fault with the energy-storage device
Handle of drawerout-type circuit breaker can't be drawn in or out	1. There is padlock at the "opening" position 2. Slideway or breaker body isn't pulled into its position	1. Take away the padlock 2. Pull the slideway or breaker body into its position
Drawerout-type breaker can't be drawn out at the "opening" position	1. Handle isn't pulled out 2. Breaker is not totally at the " opening" position	1. Pull out the handle 2. Keep the circuit breaker totally at "opening" position
Drawerout-type breaker can't reach the "making" position	1. Something drop into the drawer base, and lock the mechanism or mechanism fault happens. 2. Breaker body not match with the frame -size rated current of drawer base	1. Check and clean the drawer base, or contact with manufacturer 2. Match the body with relevant drawer base
No display on intelligent release panel	1. Release isn't connected with power 2. There is fault with release	1. Check the power is connected or not 2. Cut off the power, then connect again. Otherwise contact with manufacturer
	Rated control voltage is less than 85%Us;	Check the electromagnet power voltage shouldn't be less than 85%Us.
Fault indicator still flashing after pressing the Reset button	Fault happened with intelligent release	Cut off the power, then connect again. Otherwise contact with manufacturer

NA1-1000X~6300X Ordering specification

Customer: Tel: Date:

Quantity:

Model		☐NA1-1000X	☐NA1-2000X ☐NA1-2000XN ☐NA1-2000XH	☐NA1-3200X ☐NA1-3200XN	NA1-4000X	☐NA1-6300X ☐NA1-6300XN
Rated current In (A)		☐200 ☐400 ☐630 ☐800 ☐1000	☐630 ☐800 ☐1000 ☐1250 ☐1600 ☐2000	☐2000 ☐2500 ☐3200	☐4000	☐4000 ☐5000 ☐6300(no four poles)
Installation mode		☐ Drawout type	☐Fixed type (Note: no fixed type when In> 4000A)			
Number of poles		☐ Three poles	☐Four poles			
Intelligent Controller		Protection function			Auxiliary functions	Optional function
	☐ M type Standard (Default configuration)	1. ☐ Ir overload long delay, Isd short-circuit short delay inverse time + definite time, Ii transient short-circuit, Ig single-phase grounding 4-section protection 2. ☐ Ir overload long delay, Isd definite time short-circuit short delay,Ii transient short-circuit, Ig single-phase grounding 4-section protection			1. Ammeter function 2. Self-diagnostic function 3. Tuning function 4. Test function 5 Display function	/
	☐ 3M type Multifunctional (Optional configuration)	1. ☐ Ir overload long delay, Isd short-circuit short delay inverse time + definite time, Ii transient short-circuit, Ig single-phase grounding 4-section protection 2. ☐ Ir overload long delay, Isd definite time short-circuit short delay,Ii transient short-circuit, Ig single-phase grounding 4-section protection				☐ Voltage display ☐ Frequency display ☐ Power Factor show ☐ Active power display ☐ Load monitoring function Note: For the specific optional function, refer to List of controller functions in the sample (The cost of optional functions will be calculated additionally).
	☐ 3H-type Communication type (Optional configuration)	1. ☐ Ir overload long delay Isd short-circuit short delay inverse time +definite time Ii transient short-circuit, Ig single-phase grounding 4-section protection 2. ☐ Ir overload long delay, Isd definite time short-circuit short delay, Ii transient short-circuit, Ig single-phase grounding 4-section protection 3. ☐ with PROFIBUS-DP communication protocol ☐ with MODBUS communication protocol				
	Notes: Protection function Settable range and conventional factory tuning	Ir long delay current setting range: (0.4 to 1) In Overload 1.5Ir action time setting range: 15,30,60 ..... 480s	! Conventional factory tuning: overload long delay 1.0In ! Conventional factory tuning: overload 1.5Ir; action 15s			
		Isd short delay current setting range: (1.5 to 15) Ir; short delay action time (0.1 ~ 0.4) s	! Conventional factory setting: short delay current 8Ir ; ! Conventional factory tuning: Short delay action time 0.4s [Note: 3M, 3H for (1.5 to 15) Ir]			
		Ii instantaneous current setting range: 1.5In ~ 50kA/65kA/75kA ! Conventional factory tuning: 12In [Note: 3M, 3H for (1.5In~50kA/65kA/75kA)				
		Ig earthing protection current setting range: (0.2 to 0.8) In; the earthing protection time setting range: (0.1to0.4)s ! Conventional factory setting: 0.5 In; OFF				
	Controller power	☐AC380V,☐AC400V,☐AC220V,☐AC230V,☐AC127V,☐DC220V,☐DC110V				(Optional)
Electrical accessories	Undervoltage release (default configuration)	☐AC380V,☐AC400V,☐AC220V,☐AC230V,☐AC127V,☐Order____V ,☐Non-undervoltage				(Optional)
		☐ Instantaneous ☐ delay, s; ☐ Resistance capacity loss release delay (1,3,5) s, and optional non-adjustable				(Optional)
	Shunt release	☐AC380V,☐AC400V,☐AC220V,☐AC230V,☐AC127V,☐DC220V,☐DC110V				(Optional)
	Closing electromagnet	☐AC380V,☐AC400V,☐AC220V,☐AC230V,☐AC127V,☐DC220V,☐DC110V				(Optional)
	Electric motor	☐AC380V,☐AC400V,☐AC220V,☐AC230V,☐AC127V,☐DC220V,☐DC110V				(Optional)
Special requirements	Interlock device (surcharge)	Mechanical linkage: ☐ Link interlock ☐ Cable interlock Door interlock: ☐ Switch body position door interlock ☐ Switch on/off state door interlock (drawer-type)				(Optional)
	Accessories (surcharge)	Button lock: ☐Panel products on/off button lock Key lock: ☐1 lock 1 key ☐2 locks 1 key ☐3 locks 1 key ☐ 3 locks 2 keys ☐5 locks 3 keys ☐Special custom__lock__ key External transformer: ☐External N phase transformer [(3P+N)T type ☐External leakage zero sequence current transformer (E mode) ☐External ground current transformer (W) Module: ☐ PSU-1 Power module ☐RU-1 relay module ☐ST-DP protocol converting module ☐Position signaling devices (☐Connected ☐Test ☐Unconnected) ☐Mechanical counting device				(Optional)
	The main circuit connection	☐Horizontal connection (default) ☐Vertical connection (with L vertical bus-bar) ☐Rotation busbar horizontal connection (Drawer In ≤ 3200) ☐Rotation busbar vertical connection (drawer-type In ≤ 3200)				(Optional)

Note: The casing current, rated current and auxiliary control voltage must be specified when ordering!
Note: 1) Please mark "√" or fill figure in the relative " ☐" if no mark, we will provide according to conventional.
Note: 2) The operational fuction of the intellgent controller and special requirements require additional costs.
Tel.:0577-62877777-6213 Fax :0577-62877777-6288


NA1-6300X


NA1-4000X


NA1-3200X


NA1-2000X


NA1-1000X

Configuration instructions

1. NA1-2000X~6300X fundamental configurations
   a. Motor-driven:
      Under-voltage instantaneous release;
      Shunt release;
      Closing electromagnet;
      4 suits of transform contact;
      Motor driven operating mechanism;
      M-type Intelligent Controller;
      Horizontal wiring of main circuit;
      Doorcase;
      Element of main circuit;
      Operating instructions of M-type Intelligent Controller
      Operating instructions of Air Circuit Breaker;
      Packing box;
      Drawer seat (Drawout type)

   b. Manual:
      Under-voltage instantaneous release;
      4 suits of transform contact;
      M-type Intelligent Controller;
      Horizontal wiring of main circuit;
      Doorcase;
      Element of main circuit;
      Operating instructions of M-type Intelligent Controller
      Operating instructions of Air Circuit Breaker;
      Packing box;
      Drawer seat(Drawout type)

3. NA1-2000X~6300X operational configuration (additional costs)
   Nonadjustable under voltage delayed release (1s, 3s, 5s);
   Connecting-rod type mechanical interlock (for drawout type);
   Wire-cable mechanical interlock; Button lock; Key lock;
   Door interlock'Locking device;
   External current transformer earthing protection;
   Vertical busbar;
   Rotating busbar (IN≤3200);
   3NO (normal open) and 3NC (normal close) contacts;
   4NO and 4NC contacts; 5 groups changeover contacts;
   3 groups changeover contacts; H type intelligent controller;
   Position signal; Counter; Protecting cover (NA1-2000);
   Double power controller.

2. NA1-1000X fundamental configurations
   a. Motor-driven:
      Under-voltage instantaneous release;
      Shunt release;
      Closing electromagnet;
      Motor driven operating mechanism;
      4 normal open and 4 normal close auxiliary contacts;
      M-type Intelligent Controller;
      Closing and breaking push button lock;
      Horizontal wiring of main circuit;
      Doorcase;
      Element of main circuit;
      Operating instructions of Air Circuit Breaker;
      Packing box;
      Drawer seat(Drawout type)

   b. Manual:
      Under-voltage instantaneous release;
      4 normal open and 4 normal close auxiliary contacts;
      M-type Intelligent Controller;
      Horizontal wiring of main circuit;
      Closing and breaking push button lock;
      Doorcase;
      Element of main circuit;
      Operating instructions of Air Circuit Breaker;
      Packing box;
      Drawer seat(Drawout type)

4. NA1-1000X operational configuration (additional costs)
   Under voltage delayed release; wire-cable mechanical interlock;
   key lock; External current transformer earthing protection;
   Vertical busbar; 6 groups changeover contacts;
   H type intelligent controller; Phases barrier, position signal

Note

Note