NO:2020.04

CHINT ELECTRICS

NR8-11.5~100
Thermal Overload Relay

User Instruction

Standard: IEC/EN 60947-4-1

⚠ Safety Warning

1. Only professional technicians are allowed for installation and maintenance.
2. It is strictly prohibited to install in the environment containing inflammable, explosive gas and moist condensation.
3. Power must be turned off when installing, maintaining and maintaining the product.
4. Do not touch the conductive part of the product during working.

1 Purpose of Use

NR8-11.5~100 thermal overload relay (hereinafter referred to as thermal relay) is applicable to AC 50Hz or 60Hz circuits with rated operating voltage of 690V and below and current from 0.1A to 100A, providing overload and phase failure protection for 3 phase AC motors.

2 Key Technical Parameters

Table 1 Environmental Conditions and Main Circuit Technical Paramenters

Environmental conditions	
Ambient temp. (℃)	-5℃~+ 40℃, average temperature within 24h does not exceed +35℃.
Hot and humid atmospheric conditions	+40℃, relative humidity does not exceed 50%; up to 90% at +20℃;
Altitude	No influence below 2,000m
Pollution class/installation category	Class 3/Ⅲ

Table 1 (continue) Main Circuit Technical Parameters

Product model	Rated insulation voltage Ui V	Rated operating voltage Ue V	Rated impulse withstand voltage Uimp kV	Rated limited short-circuit current Iq kA	Range of setting current A	Fuse specifications A (recommend RT36)gG	Recommended matching contactor	Sectional area of connecting wire mm²
NR8-11.5	690	690	6	50	0.1~0.16	2	NC8-06M NC8-09M NC8-12M	1
					0.16~0.25	2		1
					0.25~0.4	2		1
					0.4~0.63	2		1
					0.63~1	4		1
					1~1.6	4		1
					1.6~2.5	6		1
					2.5~4	10		1
					4~6	16		1
					5.5~8	20		1
					7~10	20		1.5
					9~13	25		2.5
NR8-38	690	690	6	50	0.1~0.14	2		1
					0.14~0.2	2		1
					0.18~0.25	2		1

Continued Table 1

Product model	Rated insulation voltage Ui V	Rated operating voltage Ue V	Rated impulse withstand voltage Uimp kV	Rated limited short-circuit current Iq kA	Range of setting current A	Fuse specifications A (recommend RT36)gG	Recommended matching contactor	Sectional area of connecting wire mm²
NR8-38	690	690	6	50	0.22~0.32	2	NC8-09 NC8-12 NC8-18 NC8-25 NC8-32 NC8-38	1
					0.28~0.4	2		1
					0.35~0.5	2		1
					0.45~0.63	2		1
					0.55~0.8	4		1
					0.7~1	4		1
					0.9~1.25	4		1
					1.1~1.6	4		1
					1.4~2	6		1
					1.8~2.5	6		1
					2.2~3.2	10		1
					2.8~4	10		1
					3.5~5	16		1
					4.5~6.3	16		1
					5.5~8	20		1

Continued Table 1

Product model	Rated insulation voltage Ui V	Rated operating voltage Ue V	Rated impulse withstand voltage Uimp kV	Rated limited short-circuit current Iq kA	Range of setting current A	Fuse specifications A (recommend RT36)gG	Recommended matching contactor	Sectional area of connecting wire mm²
NR8-38	690	690	6	50	7.5~10	20	NC8-09 NC8-12 NC8-18 NC8-25 NC8-32 NC8-38	1.5
					9~13	25		2.5
					12~16	35		2.5
					14~20	50		4
					18~24	50		4
					23~32	63		6
					30~38	80		10
NR8-100	690	660/690	6	50	23~32	63	NC8-40 NC8-50 NC8-65 NC8-80 NC8-100	6
					30~40	100		10
					37~50	100		10
					48~65	100		16
					55~70	125		25
					63~80	125		25
					80~93	160		35
					80~100	160		35

Table 2 Auxiliary Circuit Technical Parameters

Product model	NR8-11.5			NR8-38,NR8-100		
Rated insulation voltage, Ui V	690			690		
Conventional thermal current, Ith A	5			5		
Application category	AC-15		DC-13	AC-15		DC-13
Rated operating voltage, Ue V	230	400	220	380	400	220
Rated operating current, Ie A	2.61	1.5	0.2	1.5	1.5	0.2
Type of auxiliary contact	Electrically separated 1 NC 1NO contact					
Matching fuse (RT36), A	6					

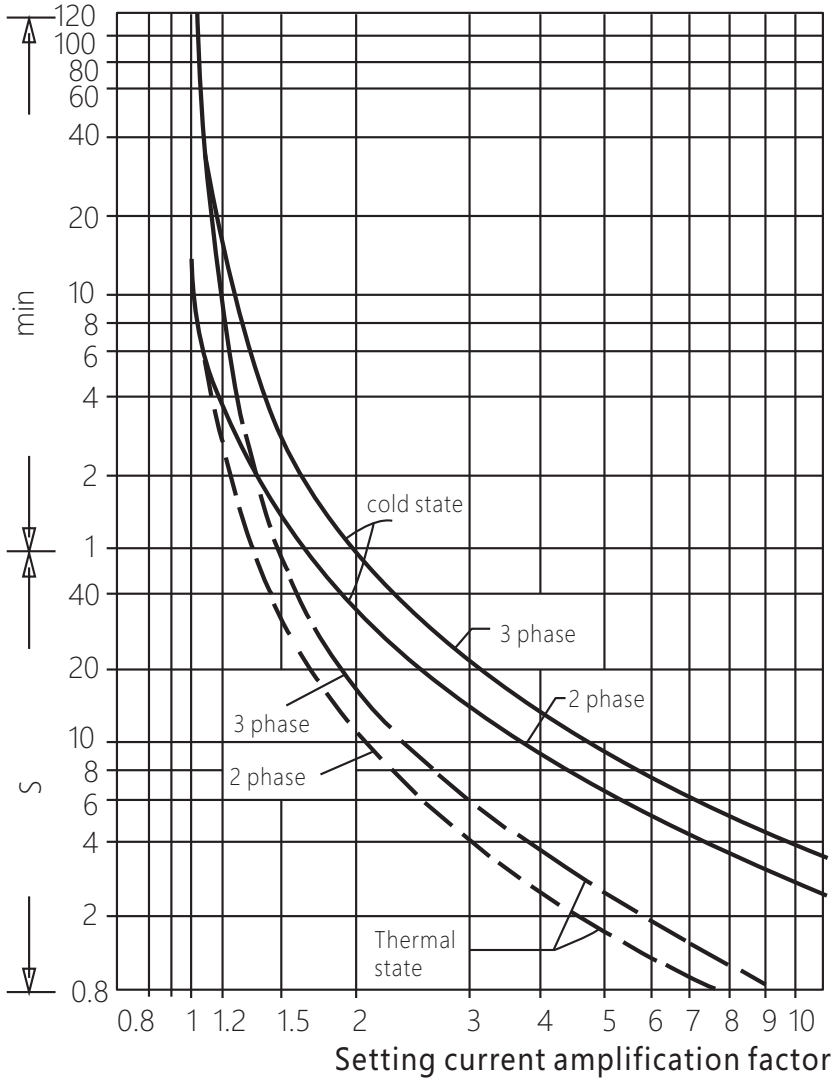

Figure 1 Thermal relay time – current characteristic curve

3 Installation

1) Installation

Unit: mm

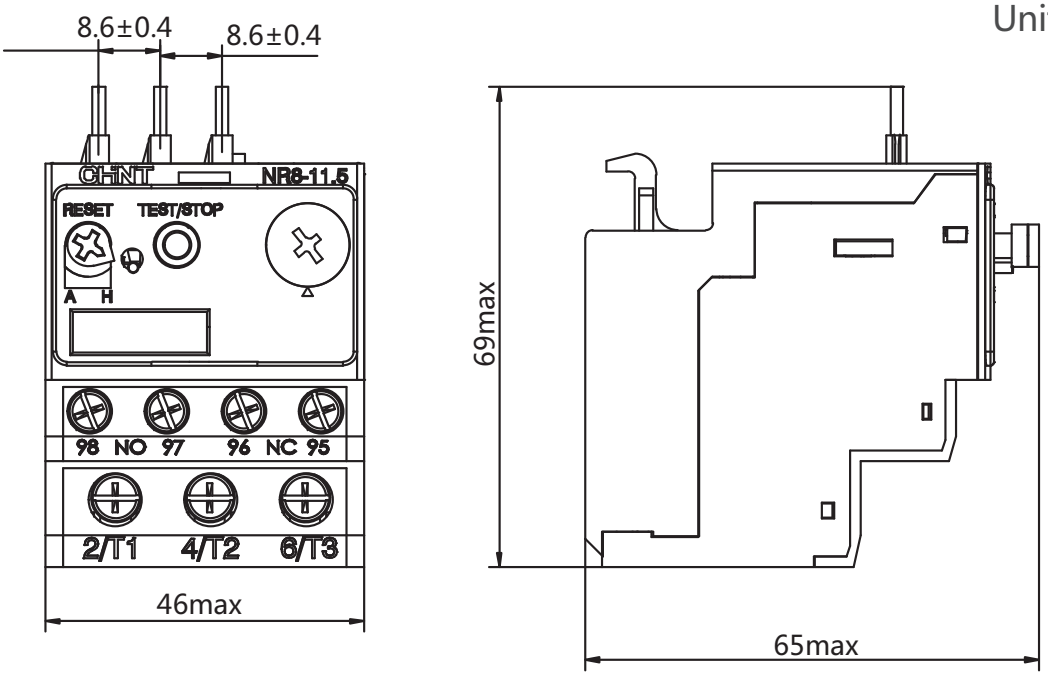

Figure 2 NR8-11.5 outline and installation dimensions

Unit: mm

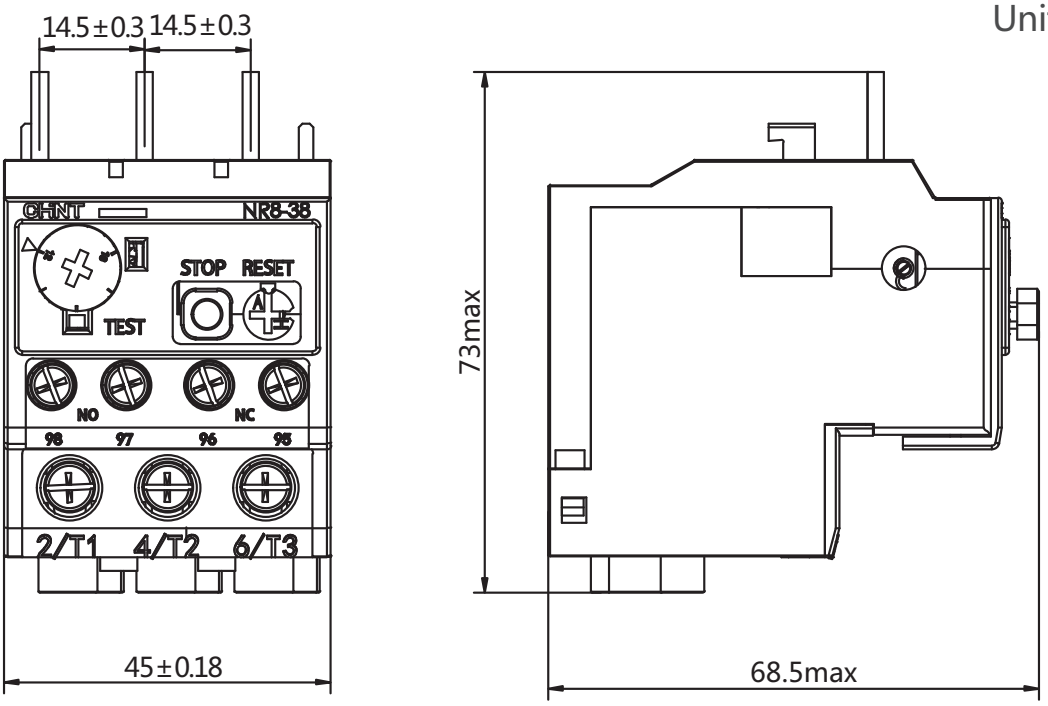

Figure 3 NR8-38 outline and installation dimensions

Unit: mm

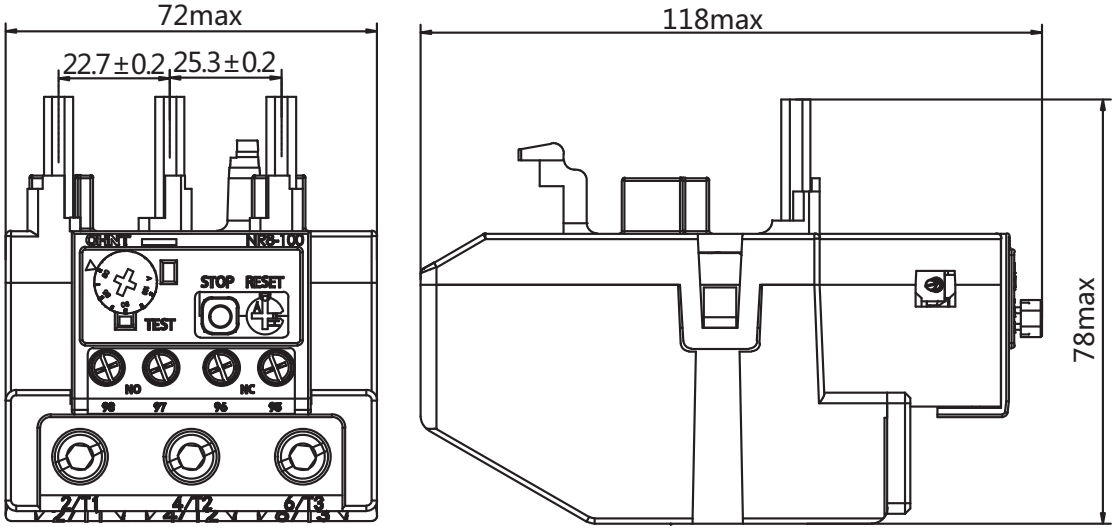

Figure 4 NR8-100 outline and installation dimensions

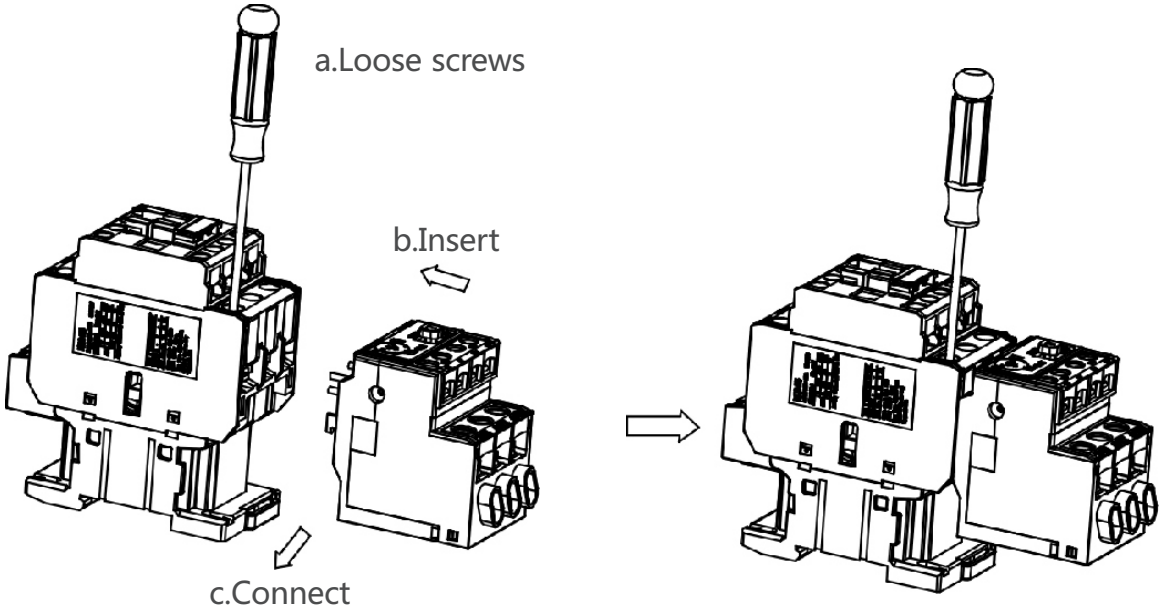

Figure 5 Thermal relay and contactor installation diagram

Table 3 Connection Torque Reference

				S (mm²)						
Main circuit	M10 10N.m	Wrench 4	NR8-100	—	—	6~35	—	6~35	—	
	M4 1.7N.m	Philips N 2	NR8-38	1~6	1~6	4~10	4~10	4~10	4~10	A>4mm,L<12mm
			NR8-11.5	1~4	1~4	1~4	1~4	1~4	1~4	A>3.5mm,L<9mm
Auxiliary circuit	M3.5 0.8 N.m	Philips N 2	NR8-11.5 ~100	mm²	mm²	mm²	mm²	mm²	mm²	A>3.5mm,L<8mm
				1~2.5	1~2.5	1~2.5	1~2.5	1~2.5	1~2.5	

2) Operation and Commissioning

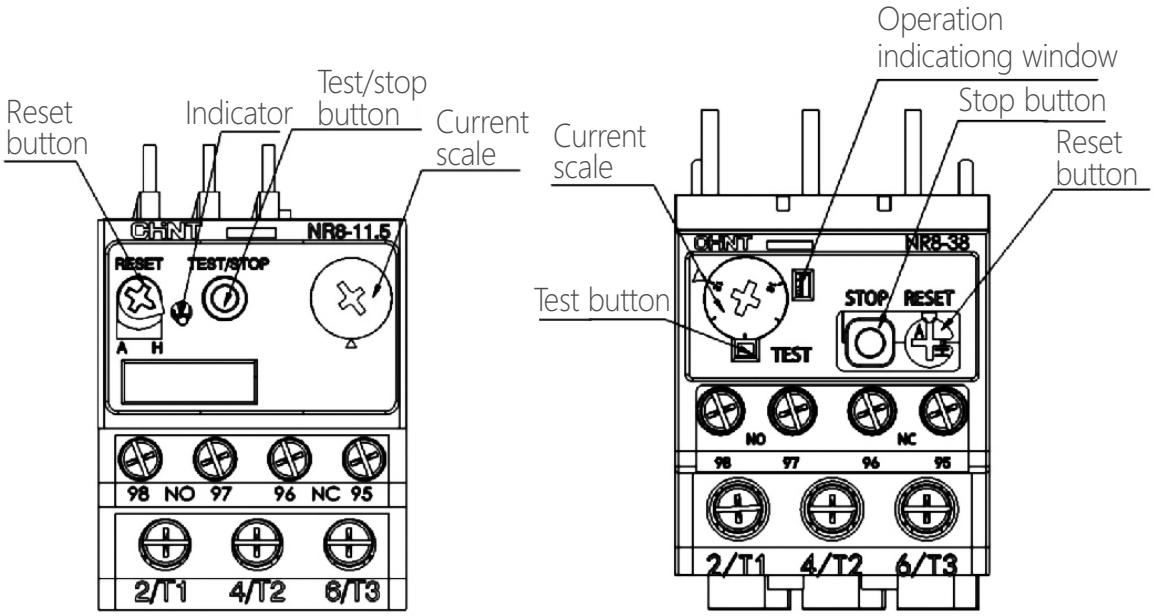

Figure 6 Thermal relay panel layout

NR8-11.5 operation diagram:

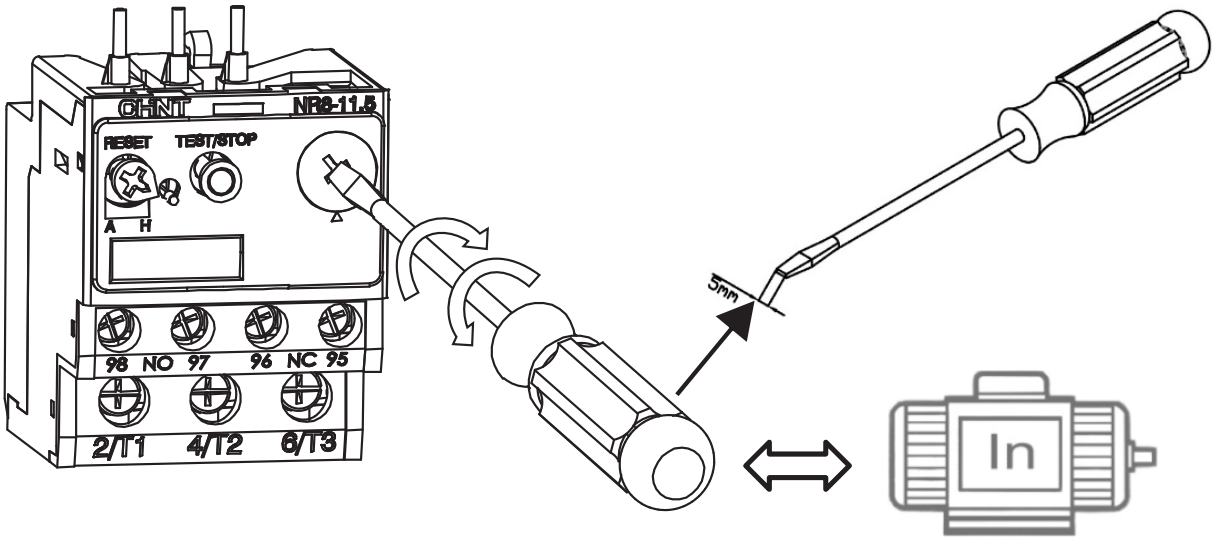

Figure 7 Setup diagram of setting current

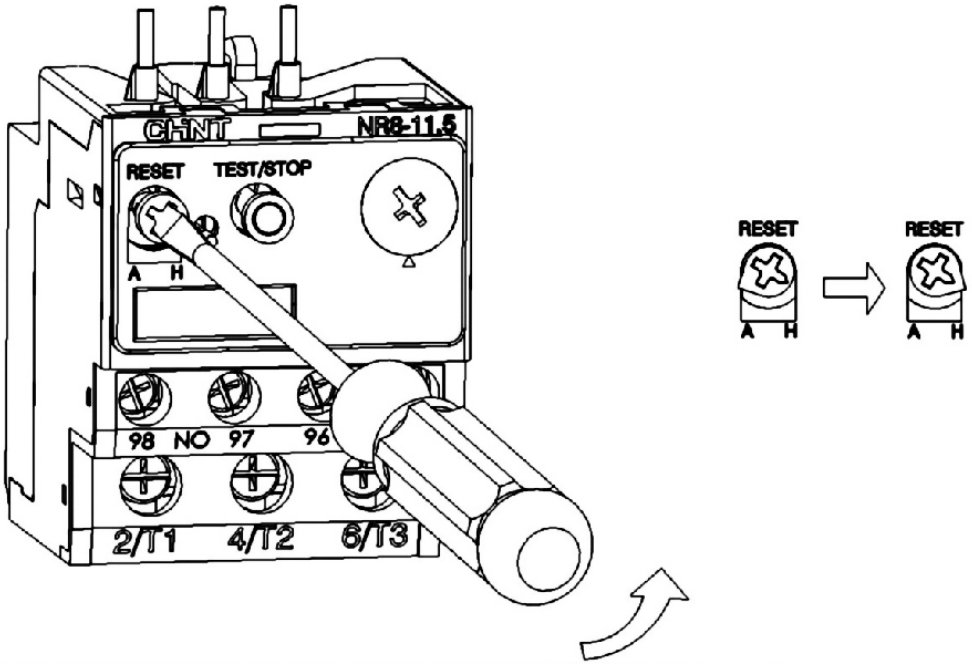

Figure 8 Reset method: auto reset to manual reset

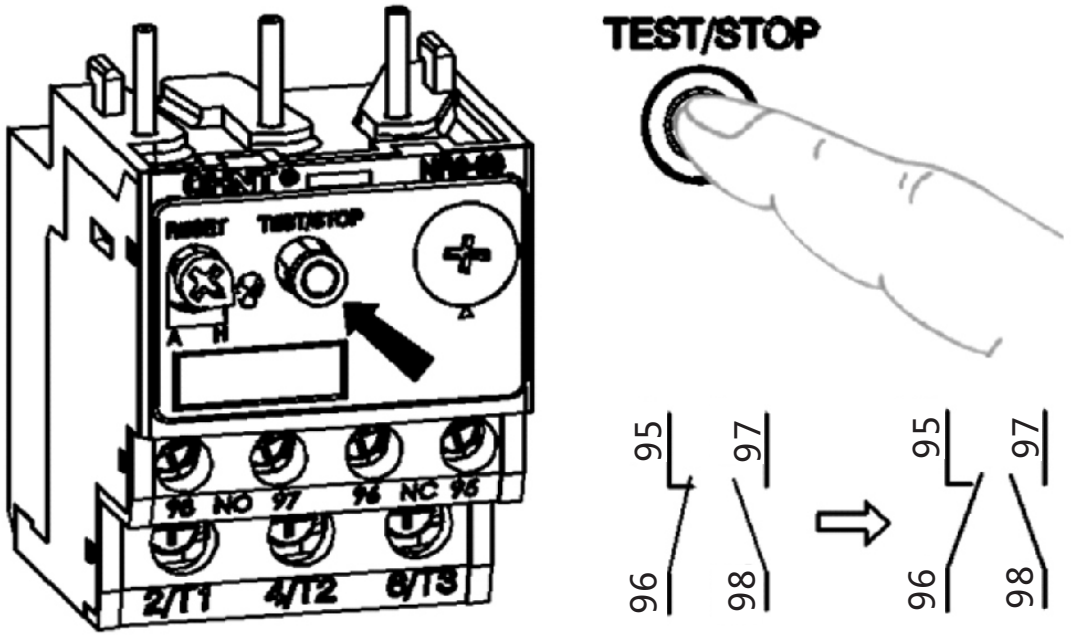

Figure 9 Stop button operation diagram

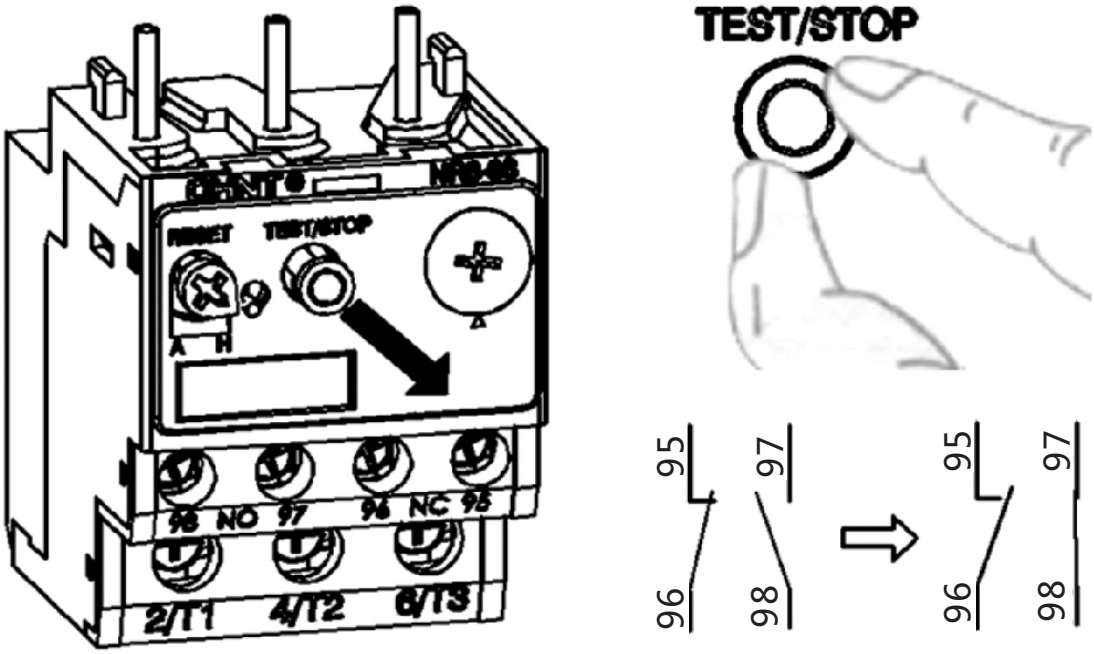

Figure 10 Test button operation diagram

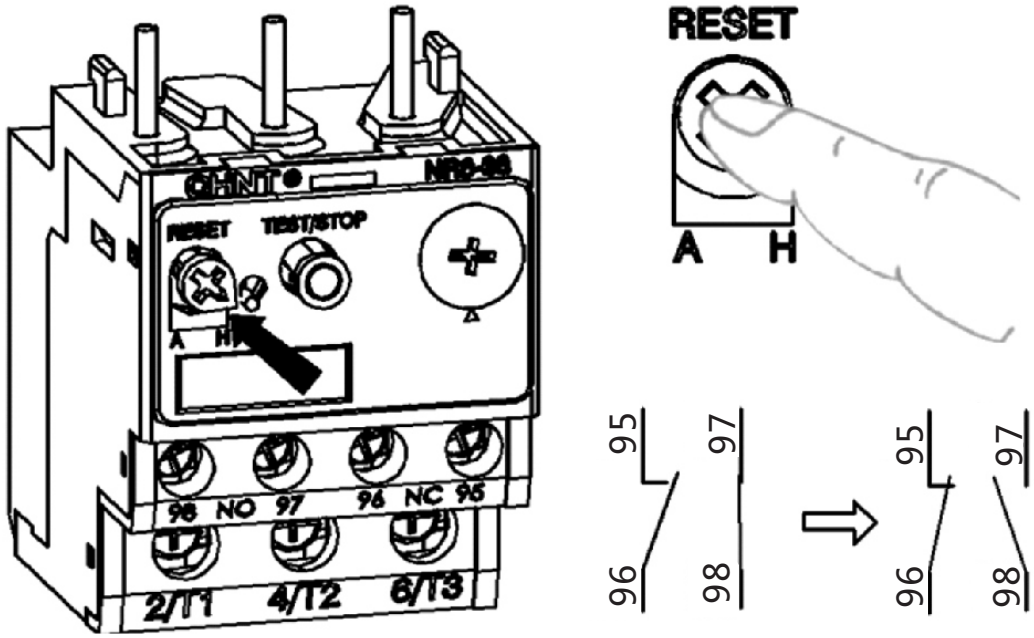

Figure 11 Manual reset button operation diagram

NR8-38, NR8-100 operation diagram:

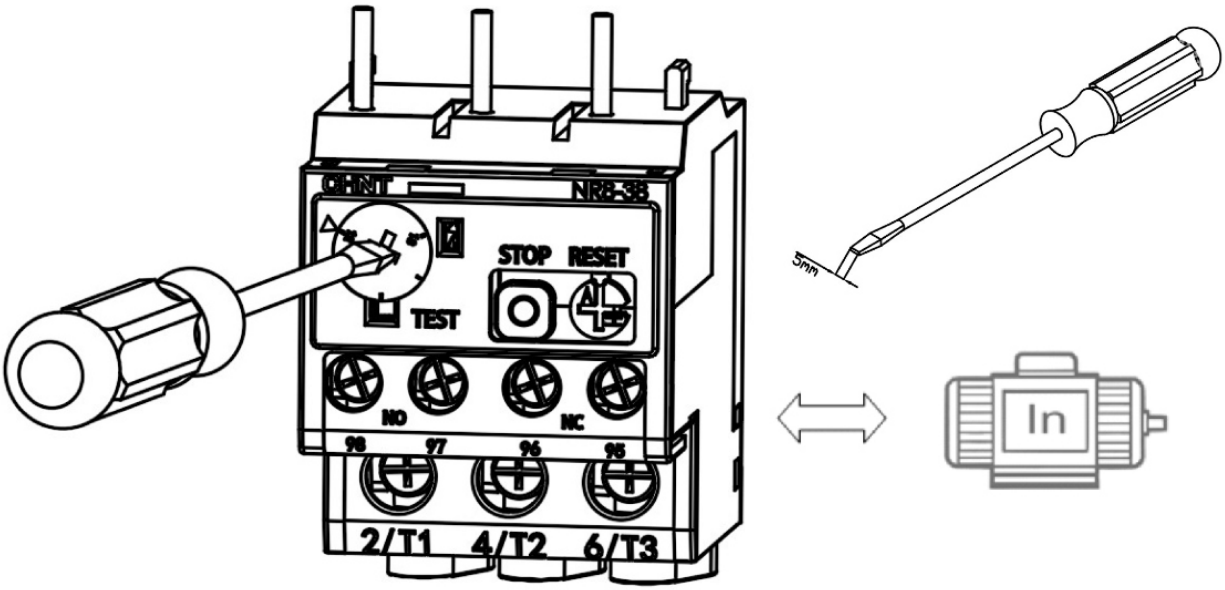

Figure 12 Setup diagram of setting current

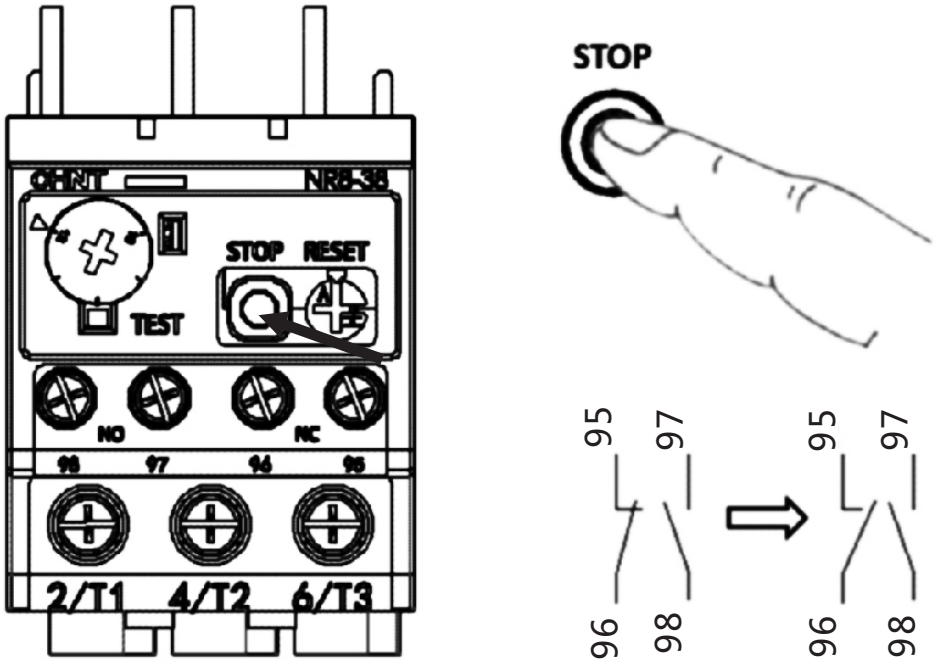

Figure 13 Stop button diagram

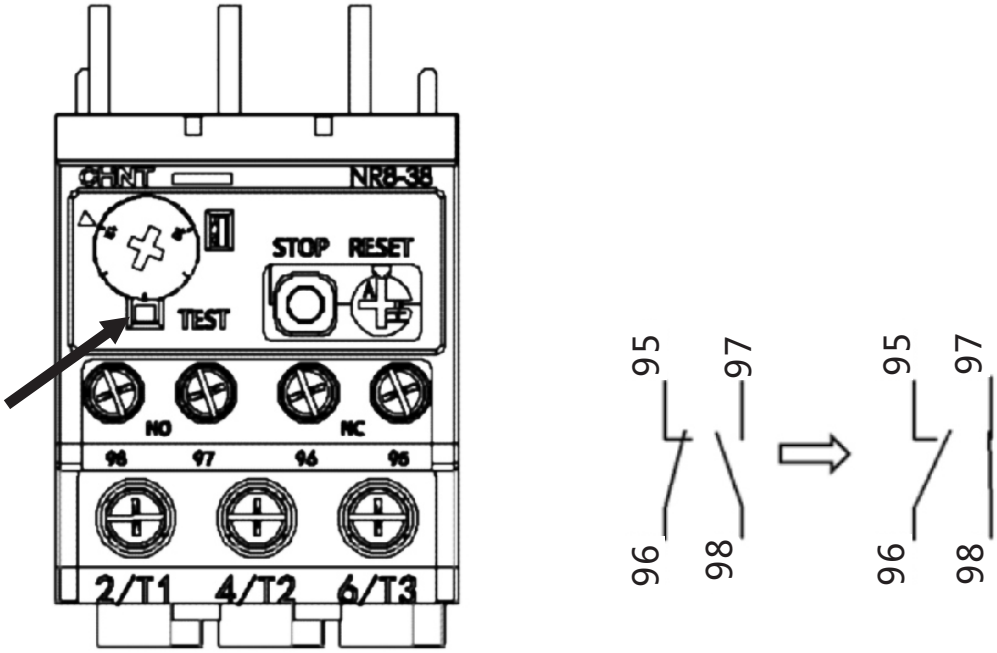

Figure 14 Test button operation diagram

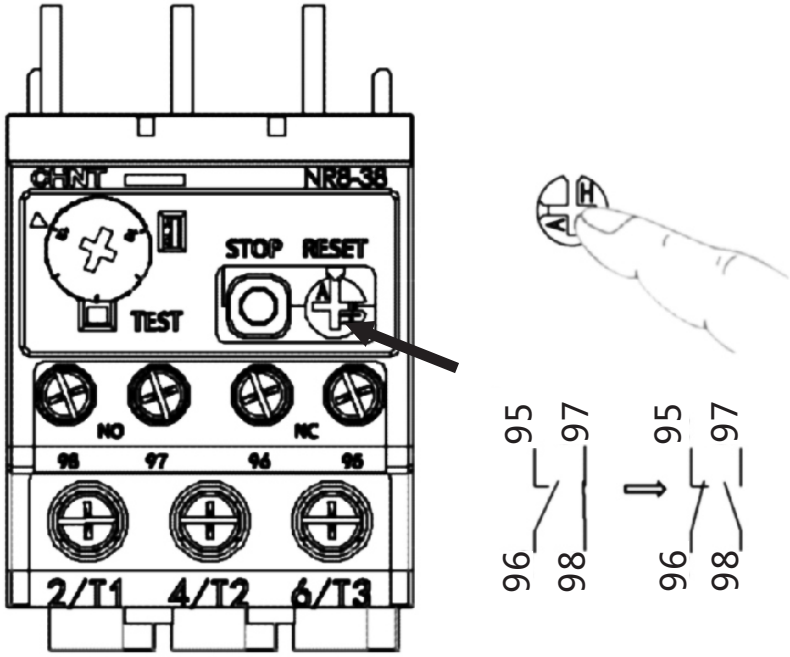

Figure 15 Manual reset operation diagram

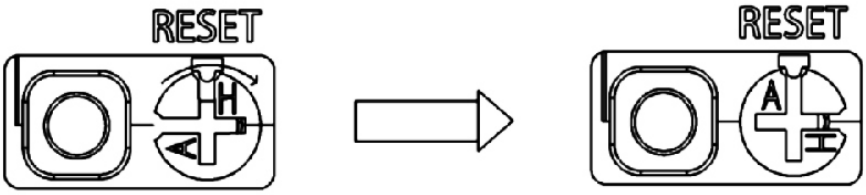

Figure 16 Manual reset to auto reset operation diagram

4 Maintenance

Conduct tests and maintenance every half a year to ensure the status of operation mechanism and NO/NC contacts. Tighten the connection screws according to specified torque and match up with the load protection capacity of thermal relay according to commissioning requirements. (See figure 17)

Handle the thermal relay carefully during transportation and installation. To prevent the product from damage and change of protection characteristics, it is forbidden to transport the relay by impactful crane.

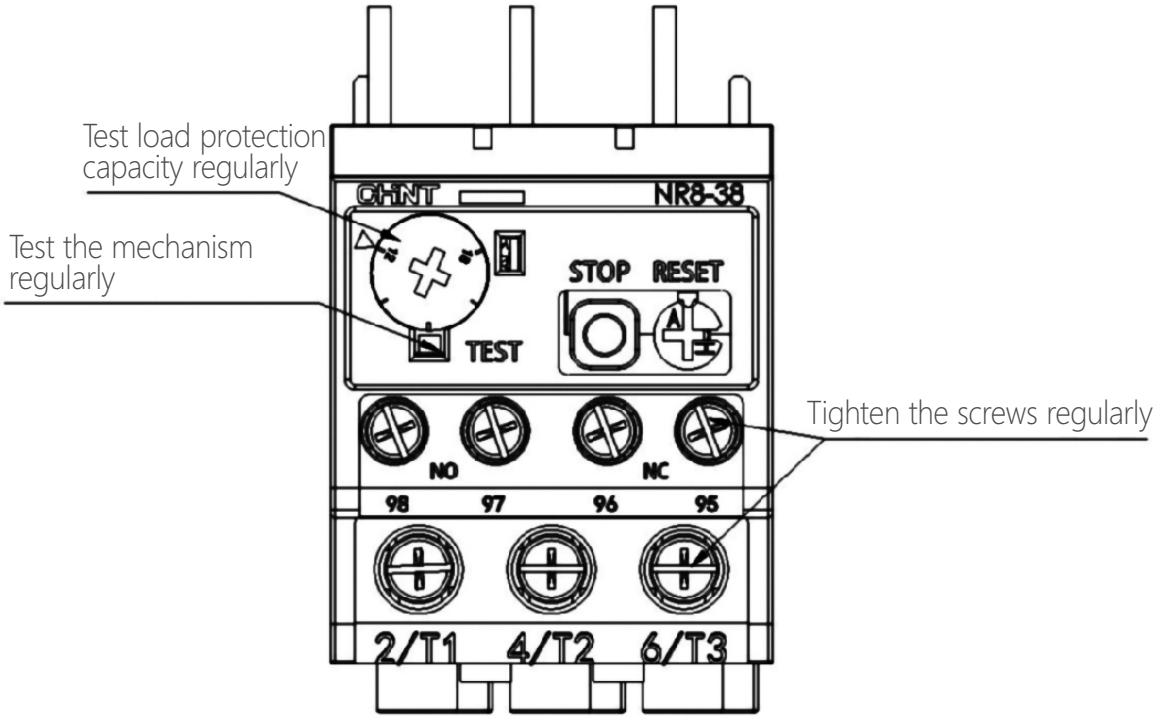

Figure 17 Thermal relay maintenance diagram

Table 4 Analysis and Troubleshooting of Common Faults

Symptoms	Cause analysis	Troubleshooting and prevention method
Motor is not overloaded, but thermal relay is misoperating.	Size is too small.	Replace with product of larger specifications
	The set current value is smaller than the actual operating current of the motor.	Adjust the cam clockwise to match the set current with the actual current.
	Strong impact or vibration	Check installation site, conduct troubleshooting, make sure the product is prevented from strong impact or vibration.
	Frequent starts of motor	The motor should start with a certain interval, with a frequency less than 30 times/hour.
	The sectional area of the selected connecting wire is too small, or the connection is loosened.	Choose standard wires and torques.
Thermal relay does not operate.	Size is too big	Replace with product of smaller specifications.
	The set current value is bigger than the actual operating current of the motor.	Adjust the cam counterclockwise to match the set current with the actual current.
	The sectional area of the connecting wire is too big.	Choose standard wires and torques.
Thermal relay does not work.	Product is not reset.	Press reset button to reset the product.
	Auxiliary contacts are not powered on	Return the product to manufacturer for repair.
	Product burnt due to short circuit in main circuit or auxiliary circuit.	Replace the thermal relay.

5 Environmental Protection

In order to protect the environment, when the product or its parts are scrapped, please properly dispose of them as industrial wastes; or be sent to the recycling station for assortment, dismantling and recycling.

CHINT

QC PASS

NR8-11.5~100
Thermal Overload Relay
IEC/EN 60947-4-1

Check 23

Test date: Please see the packing

ZHEJIANG CHINT ELECTRICS CO.,LTD.

CHINT ELECTRICS

NR8-11.5~100
Thermal Overload Relay
User Instruction

Zhejiang Chint Electrics Co., Ltd.

Add: No.1, CHINT Road, CHINT Industrial Zone,North Baixiang,
Yueqing, Zhejiang 325603,P.R.China
E-mail: global-sales@chint.com
Website: http://en.chint.com