Motor-driven Mechanism MOD -1

1. General

1.1 Function

MOD -1 series of electric operating mechanism adopts electronic technology to control the normal operation of traditional circuit breaker, realizing remote control of opening and closing, more humanized operation, and field assembling NXB -125 1P circuit breaker MOD -1 series electric operating mechanism has a wide range of applications, which can be used in tower base station, industrial power management system and so on.

2. Technical data

Environment Condition	Ambient temperature (℃)	-5℃ ~ +55℃
	Humid and hot atmospheric conditions	+40 ℃, relative humidity 50%+It can reach 90% at 20 ℃;
	Altitude	No more than 2000m
Technical Parameter	Rated working voltage Ue (V)	DC40-60V
	Product width	27mm
	Action time	Opening ≤ 0.2S, closing ≤ 0.5s (excluding delay)
	Installation mode	Guide rail installation
	Mechanical life	10000 times, 3 times / min
	Insulation voltage	≥500V
	Mode of action	Remote control, can be remote opening and closing
	indicator light	Indicator light on: normal operation; Indicator light off: there is no power supply or the [manual / automatic] switch is in manual state
	[manual / automatic] operation	Set [manual / automatic] to automatic mode, remote control can be carried out: if [manual / automatic] is set to automatic mode, it can be opened or closed manually without automatic action
	Communication function	RS485 Modbus protocol, baud rate 9600bbs, address code 1-247.

3. Overall and mounting dimensions (mm)

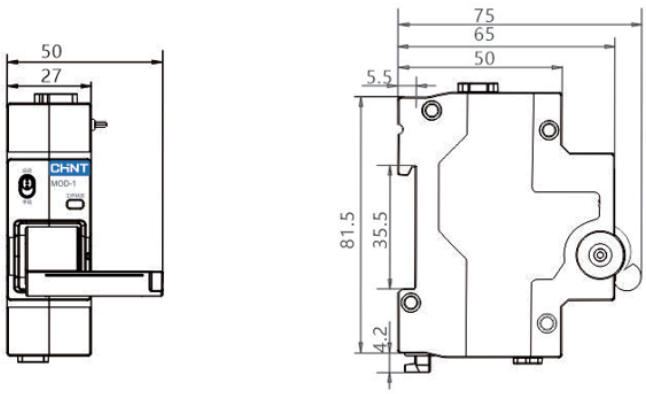

4. Installation guide

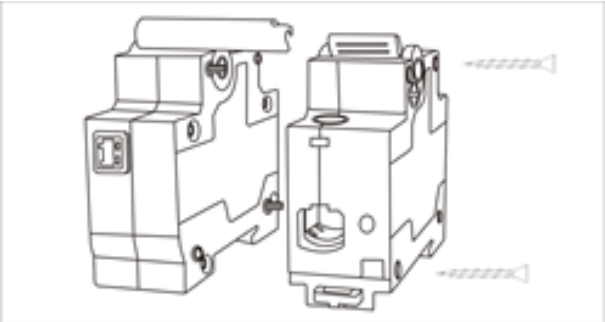

5. MOD-1 Communication protocol

5.1: basic rules

1. Communication protocol format

Address code	Function code	data	CRC16 calibration

2. Communication baud rate 9600, no parity check, 1 stop bit
3. The frame response timeout is 50ms

5.2: function code function

Function code	purpose
0x03	Read single or multiple holding registers
0x10	Write single or multiple holding registers
0x83	Read abnormal function code
0x90	Write abnormal function code

Return value	express
0x01	Illegal function
0x02	Illegal data address
0x03	Illegal data value
0x04	Slave equipment failure

5.3: function code description

1. 0X03 (Read register)

distribution box host--------> splitter

Address code	Function code	Register address	Number of registers	CRC check	
1 byte	1 byte	2 bytes	2 bytes	2 bytes	
Slave address	0X03	0-0xFFFF	N	CRC low	CRC high

(normal response) splitter --------> distribution box host

Address code	Function code	Number of bytes	data	CRC check	
1 byte	1 byte	1 byte	2*N bytes	2 bytes	
Slave address	0X03	2*N	2*N bytes	CRC low	CRC high

(abnormal response) splitter --- > distribution box host

Address code	Function code	Exception code	CRC check	
1 byte	1 byte	1 byte	2 bytes	
Slave address	0X83	0x01/0x02/0x03/0x04	CRC low	CRC high

2. 0x10 (write register)

distribution box host--------> splitter

Address code	Function code	Register address	Number of registers	Number of bytes	data	CRC check	
1 byte	1 byte	2 bytes	2 bytes	1 byte	2 * N bytes	2 bytes	
Slave address	0X10	0-0xFFFF	N	2*N	2 * N bytes	CRC low	CRC high

(normal response) splitter -------- > distribution box host

Address code	Function code	Register address	Number of registers	CRC check	
1 byte	1 byte	2 bytes	2 bytes	2 bytes	
Slave address	0X10	0-0xFFFF	N	CRC low	CRC high

(abnormal response) splitter --- > distribution box host

Address code	Function code	Exception code	CRC check	
1 byte	1 byte	1 byte	2 bytes	
Slave address	0X90	0x01/0x02/0x03/0x04	CRC low	CRC high

5.4: single phase circuit breaker - register address

Register name	Register address	Type / length	Company	attribute	explain
Device properties					
address	0	U16		Read / write	

Equipment type	1	U16		read-only	See Table 1
Hardware version number	2	U16		read-only	
Software version number	3	U16		read-only	
Serial number of equipment	4-11	16Byte		Read / write	
Baud rate setting	12	U16		Read	
Equipment status					
Switch status	13	U16		Read / write	See Table 2
Switch mode	14	U16		Read / write	See Table 3
Switch failure	15	U16		Read / write	See Table 4
Remote opening and closing times	16	U16		read-only	
Timing opening and closing times	17	U16		read-only	
Automatic closing times	18	U16		read-only	
Fault opening times	19	U16		read-only	
Reclosing function					
Auto reclosing enable	54	U16		Read / write	0: off 1: on (1)
Number of reclosing cycles	55	U16		Read / write	0: infinite (0)
Auto reclosing time	56	U16	1S	Read / write	20~60s(20s)

Table 1: equipment types

value	explain
0	Module without metering
1	With 1p single phase metering module
2	With 2p single phase metering module
3	With 3P three-phase metering module
4	With 4P three-phase metering module

Table 2: switch status

Value (read)	explain
0x0000	Local closing
0x00FF	Local opening
0x0100	Remote closing
0x01FF	Remote opening

0x0300	Automatic closing
0x04FF	Fault opening
0x0055	Switch failure
Value (write)	explain
0x0000	Switch on
0x00FF	Opening
0x5500	Release switch fault

Table 3: switching modes

Value (read)	explain
0	normal
1	Local lock
2	Remote lock
3	Local lock + remote lock
Value (write)	explain
0	Remote unlocking
2	Remote lock

Table 4: switch failure

Value (read)	explain
0	normal
1	Reset sensor not detected
2	Closing sensor not detected
3	Opening sensor not detected
4	Closing limit switch not detected
5	Opening limit switch not detected
Value (write)	explain
0	Release switch fault

NXB-125 Moulded case circuit breaker

1. Compliant standards

IEC/EN60947-2

2. Compliant certification

CE

3. Major function

Overload protection, short circuit protection, positive isolation

4. Technical parameters

Rated current: 63A, 70A, 80A, 90A, 100A (1P, 2P, 3P, 4P), 125A (1P, 2P);
Rated voltage: 230V ~ (1P), 400V ~ (2P, 3P, 4P);
Frequency: 50/60Hz
Thermal magnetic release: C: 8In, D:12In
Number of poles: 1P, 2P, 3P, 4P;
Mechanical life: 20000 cycles;
Electrical life: 6000 cycles (In≤100A); 5000 cycles (In > 100A);
Rated short-circuit breaking capacity(Icu): 10kA;
Short-circuit breaking capacity(Ics): 7.5kA;
Rated impulse withstand voltage(Uimp): 4kV;

DC parameters

Number of poles	1P			2P		
Rated operational voltage Ue (V)	60VDC	80VDC	110VDC	80VDC	125VDC	220VDC
Rated current In (A) 63, 80, 100, 125A	63, 80, 100, 125A					
Rated ultimate short circuit breaking capacity Icu (kA)	20	10	10	20	20	10
Rated service short circuit breaking capacity Ics (kA)	15	7.5	7.5	15	15	7.5

5. Dimensions and installation sizes

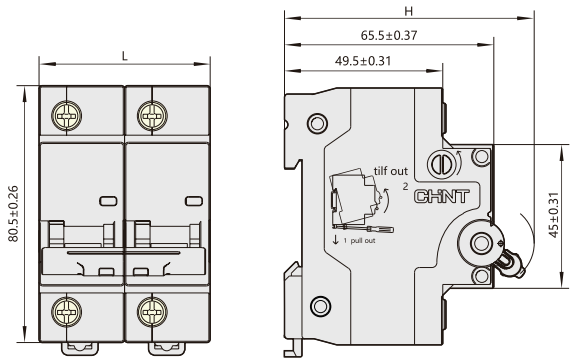

	1P	2P	3P	4P
L(mm)	$27^{0}_{-0.52}$	$54^{0}_{-0.74}$	$81^{0}_{-1.40}$	$108^{0}_{-1.40}$
H(mm)	$75.5^{0}_{-1.20}$	$78.5^{0}_{-1.20}$	$78.5^{0}_{-1.20}$	$78.5^{0}_{-1.20}$

Temperature derating see table 2

Table 2

Ambient temperature(℃) → / Rated current(A) ↓	-35	-20	-10	0	10	20	30	40	50	60	70
63~125	1.43	1.33	1.26	1.2	1.14	1.07	1	0.93	0.87	0.81	0.74