CHINT

Dry-type Transformer

www.chint.com en.chintelectric.com

2014/2015

Dry-type Transformer

Brief Introduction

About CHINT Electric

CHINT Electric is a subsidiary of CHINT Group Corporation. With an investment of 450 million USD, CHINT Electric possesses 4300 employees and 5 manufacturing business units with manufactory area of 900,000m^2 located in Shanghai, which is one of the world's largest power transmission & distribution equipments manufactory centers.

New Orders

Around 725 million USD in the year of 2012

Employee

4,300 employees

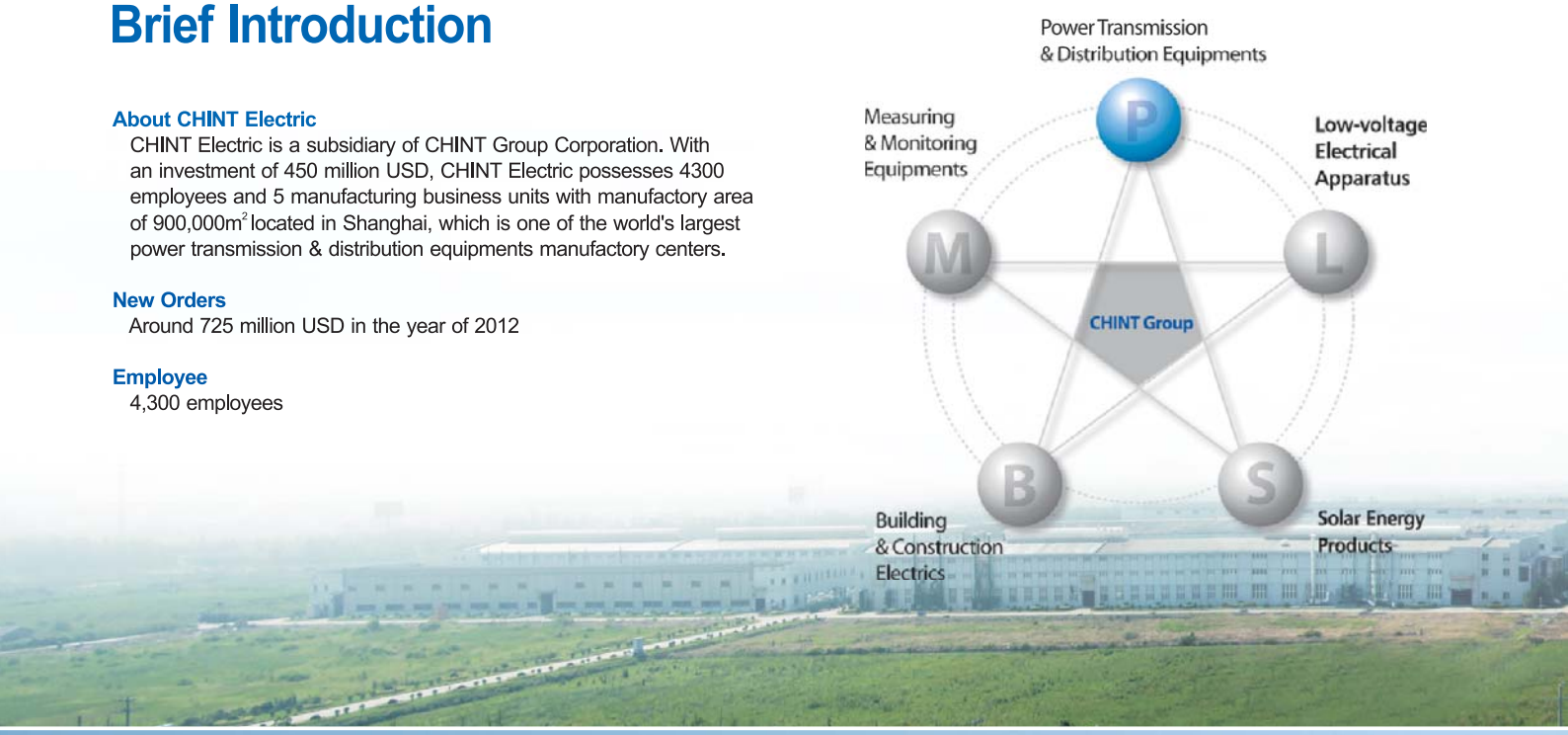

Product Range

- Power Transformer up to 750kV
- Distribution Transformer up to 35kV
- Dry-type Transformer up to 35kV
- Reactor up to 220kV
- GIS up to 252kV
- HV Circuit Breaker & Disconnector up to 252kV
- VCB 12~40.5kV
- MV & LV Switchgear Panel, Prifabricated Substation up to 40.5kV
- LV Terminal Box, Bus Bar Duct
- Surge Arrester & Insulator up to 500kV, CT & PT up to 220kV
- Power Distribution Automation System
- Cable up to 36kV
- Capacitor
- Turn-key Solution

About CHINT Group

- CHINT is the leading player in the Power Transmission & Distribution industry and Low-voltage electrics industry in China. Founded in 1984 by a few local entrepreneurs and currently hiring 29,000 employees worldwide.
  National Employment Advanced Corporate (China State Council, 2012)
- Ranked in The 2011 BCG 100 New Global Challengers
  (The Boston Consulting Group, 2011)
- CHINT Low-voltage Electrics launched IPO at the Shanghai Stock Exchange of China (2010)
- No.2 in China Electricity Industry's Top 10 Most Competitive Enterprises (China Machinery Industry Information Institute, 2009)
- No.3 in China Electricity Industry(China Machinery Industry Information Institute, 2009)
- No.240 in Top 500 Chinese-Companies (China Enterprise Federation, 2009).
- No.1 in Power T&D and the controlling devices (China Machinery Summit, 2009)
- Ranked in Top 100 Best Employers in China (China Entrepreneurs Summit, 2008)
- No.15 in Top 100 Private & Public Companies in China (Forbes, 2006)
- National Quality Management Award(2004) (One of top honours for manufacturing companies in China)
- Worldwide business operation with 2,000 sales offices, agents, distributors, and local partners in domestic Chinese market and distributors & local partners in over 105 countries. International branches or regional offices set up in USA, UAE, Germany, Russia, Brazil, Ukraine, Hong Kong of China, UK and Nigeria.
- CHINT stretches its business to a new frontier of solar energy by setting up a branch company specialized in the solar energy products development.
- The R&D center of CHINT is recognized as the National Level R&D Center run by the companies, which means the R&D level of CHINT Group has reached the leading position in the industry of China.

Sales References

With a worldwide presence in over 125 countries such as, Italy, Germany, Estonia, USA, Russia, Japan, Australia, Saudi Arabia, Poland, Ukraine, Mongolia, Kazakhstan, Pakistan, Myanmar, Indonesia, Thailand, Egypt, Yemen, Algeria, Morocco, Congo, Tanzania, Mali, Zambia, Kenya, South Africa, Ghana, Nigeria, Colombia, etc, CHINT Electric provides reliable and high-qualified products and solutions to clients engaged in different businesses.

Utility User

Application: *cooperation with National Electricity Companies in over 50 countries for power generation, transmission and distribution.*

Europe

- *EAC-Cyprus*
  Products: Cable.
- *Eesti Energia-Estonia*
  Products: Power transformer.
- *EMS-Serbia*
  Products: Power transformer.
- *ENEL-Italy*
  Products: Distribution transformer, cable.
- *Fingrid-Finland*
  Products: Distribution transformer.
- *HS ORKA HF-Iceland*
  Products: Power transformer.
- *PPC-Greece*
  Products: Power transformer, cable.
- *NEC-Bulgaria*
  Products: VCB.

Latin America

- *BPC-Bhutan*
  Products: Surge arrester.
- *CELEC S.P.-Ecuador*
  Products: Power transformer.
- *CNEL-Ecuador*
  Products: Power transformer.
- *ELCOSA-Honduras*
  Products: Power transformer.
- *Enersis-Chile*
  Products: Power transformer, surge arrester, insulator, SF_6 circuit breaker.
- *ENDESA-Chile*
  Products: Power transformer, surge arrester, insulator, SF_6 circuit breaker.
- *ICE-Costa Rica*
  Products: Power transformer.
- *PREPA-Puerto Rico*
  Products: Surge Arrester.

Asia-pacific

- *EVN-Vietnam*
  Products: Switch disconnector, power transformer, etc.
- *Kamoki-Pakistan*
  Products: Substation turn-key project.
- *MEPE-Myanmar*
  Products: Reactor, Power transformer.
- *NEA-Nepal*
  Products: Substation turn-key project.
- *NTDC-Pakistan*
  Products: Substation turn-key project.
- *QESCO-Pakistan*
  Products: Surge arrester.
- *TEPCO-Japan*
  Products: Power transformer, circuit breaker, disconnector and CT&PT.

Africa

- *EEPCO-Ethiopia*
  Products: HV Circuit breaker, disconnector, earthing switch, surge arrester, insulator, CT.
- *ENE-Angola*
  Products: GIS.
- *JIRAMA-Madagascar*
  Products: Reactor.
- *KENGEN-Kenya*
  Products: Surge arrester.
- *KPLC-Kenya*
  Products: Cut-out fuse, surge arrester, insulator.
- *PHCN-Nigeria*
  Products: Transformer protection & control panel.
- *RECO-Rwanda*
  Products: Distribution transformer, etc.
- *REGIDESO-Burundi*
  Products: Power transformer, distribution transformer.
- *SBEE-Benin*
  Products: Power transformer.
- *SNEL-D.R. Congo*
  Products: Power transformer.
- *SONABEL-Burkina Faso*
  Products: Power transformer, reactor.
- *TANESCO-Tanzania*
  Products: Substation turn-key project.
- *VRA-Ghana*
  Products: MV switchgear, DC panel, disconnector.
- *ZESCO-Zambia*
  Products: CT-VT metering unit.

Middle-east

- *NEC-Sudan*
  Products: Power transformer.
- *NEPCO-Jordan*
  Products: Power transformer, earthing transformer.
- *ONEC-Oman*
  Products: Power transformer.
- *PEC-Yemen*
  Products: Substation turn-key project.
- *PEDEEE-Syria*
  Products: Insulator, surge arrester, substation turn-key project.
- *PEEGT-Syria*
  Products: Insulator.
- *TEIAS-Turkey*
  Products: Surge arrester, insulator.
- *WARD-Lebanon*
  Products: SF_6 circuit breaker, disconnector, surge arrester, insulator.

CIS

- *ENA-Armenia*
  Products: HV circuit breaker, switch disconnector, etc.

More >>>

Global Operation in Over 125 Countries

Industrial End User

Application: *widely applicable for mining, iron-steel, cement, metallurgy, chemical, railway, petroleum, paper, power generation industries, etc.*

Mining Industry

- *BHP Billiton-Australia*
  Products: CT& PT, distribution transformer, etc.
- *Rio Tinto-Australia*
  Products: Distribution transformer, CT.
- *FMG-Australia*
  Products: Power transformer.

Iron-steel Industry

- *JFE Steel-Japan*
  Products: Disconnector.
- *Bao Steel-China*
  Products: Power transformer, MV switchgear panel.

Cement Industry

- *Serebryabskiy Cement Plant-Russia*
  Products: HV capacity compensation device, HV capacitor.
- *Viet Quang Cement Plant-Vietnam*
  Products: Power transformer, HV circuit breaker, disconnector, MV&LV switchgear panel.

Petroleum & Gas Industry

- *Chevron-USA*
  Products: Switchgear panel, distribution transformer.
- *PDVSA-Venezuela*
  Products: Power transformer, distribution transformer.
- *CNPC-China*
  Products: Power transformer, GIS, MV switchgear panel.

Power Rental Industry

- *Aggreko-UK*
  Products: Power transformer.
- *APR Energy-USA*
  Products: Power transformer, HV circuit breaker, disconnector, CT, PT.

Paper Industry

- *VISY-Australia*
  Products: Switchgear panel
- *UPM-Finland*
  Products: MV switchgear panel.

Chemical Industry

- *Saint Gobain-France*
  Products: Power transformer, MV switchgear panel, cable, busduct.
- *INVISTA-USA*
  Products: Distribution transformer, switchgear panel, DC panel.

Power Generation

- *TATA Power-India*
  Products: Power transformer.
- *SIBAYAK Geothermal Power Plant-Indonesia*
  Products: MV&LV switchgear panel, surge arrester, insulator, CT, VCB.

Commercial & Civil Construction

- *Shangri-la Hotel-Philippine*
  Products: Distribution transformer.
- *Kiev Boryspil International Airport-Ukraine*
  Products: GIS.

Shipbuilding Industry

- *Fincantieri-Italy*
  Products: Power transformer.

More >>>

Engineering & Contracting

- *EIFFAGE-France*
  Products: Power transformer, reactor.
- *FLUOR-USA*
  Products: Power transformer.

More >>>

Turn-key Project

- *Kamoki-Pakistan*
  Projects: 230kV substation EPC.
- *Saint Gobain-France*
  Projects: 35kV substation EPC.
- *PEC-Yemen*
  Projects: 132kV and 33kV substation EPC.
- *NEA-Nepal*
  Projects: 132kV and 33kV substation EPC.
- *SMCO-D.R. Congo*
  Projects: 220kV substation EPC.
- *TANESCO-Tanzania*
  Projects: 35kV and 66kV substation EPC.
- *NTDC-Pakistan*
  Projects: 220kV substation EPC.

More >>>

Sales References

Dry-type Transformer

CHINT Electric dry-type transformers are widely adopted by Industrial End Users from Australia, Japan, Italy, France, South Africa, Bangladesh, Saudi Arabia, etc. like Saint Gobain, VISY Paper, SACOL, etc.; Utility Users from Laos, etc. and Engineering Companies from Australia, Lebanon and so on.

- Visy Paper Pty Ltd - Australia
- ICAN Company Ltd - Japan
- National Electricity Company - Laos
- CODELCO - Chile
- Saint Gobain - China Heilongjiang Ceramic Material Factory - France
- Malabo International Convention Center Project - Equatorial Guinea
- Ampcontrol Africa (Pty) Ltd - South Africa
- South African Coal and Oil (SASOL) - South Africa
- Barrick Gold - South Africa
- China National Heavy Machinery Corporation (CHMC) - Turkey
- Kingdom Iron & Steel Holding Company - Saudi Arabia
- NGS Cement Plant - Bangladesh

……

※ Note: Contact us for more detailed sales references.

Table of Contents

Dry-type Transformer

1. General 1

2. Technical Feature 2

3. Structure Feature 3

4. Component 7

5. Quality Management, Product Certificate, After-sales Service 8

6. Customer-oriented Support System 9

7. Main Technical Data 11

- Epoxy Resin Cast Dry-type Transformer 11
  - SC(B)9-30～2500/10 11
  - SC(B)9-50～2500/20 12
  - SC(B)9-50～2500/35 13
  - SC(B)9-800～20000/35 13
- H-class Impregnated Insulated Dry-type Transformer 14
  - SG(B)10-100～2500/10 14
- Amorphous Alloy Core Dry-type Transformer 15
  - SCBH15-30～2500/10 15

8. Overall and Installation Dimension 16

9. Ordering Information 20

Dry–type Transformer

1. General

1.1 Main Feature

- Dry-type transformer mainly consists of core and windings, it doesn't immerse in insulating liquide. Our dry-type transformer designs according to IEC standards and China national standards.
- With no leakage of oil and gas , security, environmental protection, and low-noise performances.

1.2 Application

- Mainly used for locations having special fire safety requirements such as commercial buildings,high-rise buildings,airports, industrial and mining enterprises, power plants, oil platforms, subways and tunnel.
- Applicable for 50/60Hz system.

1.3 Working Condition

- Max.ambient temperature: +40℃
- Max.daily average ambient temperature : +30℃
- Max.annual average ambient temperature: +20℃
  Min. temperature: -5℃ (indoor installation)
- Min. temperature: -30℃ (outdoor installation)
  Altitude: ≤1000m
- Relative humidity: ≤93%, no dews on the winding surface.
- Customized products are available.

1.4 Standard

- IEC 60076-11:2004; ANSI, etc.

SC(B) Epoxy Resin Cast Dry-type Transformer

Type Designation

S C (B) □ - □/□

- Rated voltage (kV)
- Rated power (kVA)
- Design code
- Foil winding
- Resin cast
- Three-phase

SG(B) H-class Impregnated Insulated Dry-type Transformer

Type Designation

S G (B) □ - □/□

- Rated voltage (kV)
- Rated power (kVA)
- Design code
- Foil winding
- Dry-type, natural air cooling
- Three-phase

SCBH15 Amorphous Alloy Core Dry-type Transformer

Type Designation

S C B H 15 — □ / □

- Rated voltage (kV)
- Rated power (kVA)
- Loss level code
- Amorphous alloy core
- Foil winding
- Forming solid (Casting)
- Three-phase

2. Technical Feature

2.1 Transformer technology of CHINT Power T&D is based on model experiments, self-developed calculation software of leakage flux, short circuit mechanical strength, on load losses etc, to realize overall optimization of electrical performance of transformer, therefore low-cost and high-performed solutions could be provided to the customers.

2.2 The structure design is based on three-dimension finite element analysis software ,to do analysis on transformer iron core and clamping pieces,which provides a guarantee to enhance mechanical strength,anti-short-circuit capacity and reduce noise.

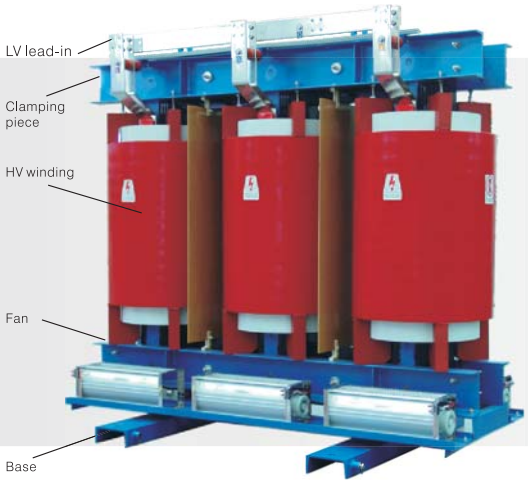

Performance Feature

- Safety, fireproofing, non-polluting, direct operation on the load center.
- Strong mechanical strength, excellent insulation capacity, low partial discharge ,strong radiation capability, high reliability and long life.
- Low loss, low noise, energy-saving.
- High heat dispersion and strong serviceability , forced air cooling can improve the operation of capacity.
- High humidity-resistant, environmental protection, fire-retardant, explosion-proof, less maintenance compact design and light weight.

Performance Feature

- Lower temperature rise, long thermal life.
- Fire-retardant, long time burning under 800˚C high temperature without smoke generation.
- Strong thermal shock resistance ,at -50˚C can immediately increase full load.
- High humidity-resistant performance.
- Low loss, a significant energy saving effect.
- Easy recycling on insulating material and copper at life end for envirnmental protection.
- Temperature control meter.

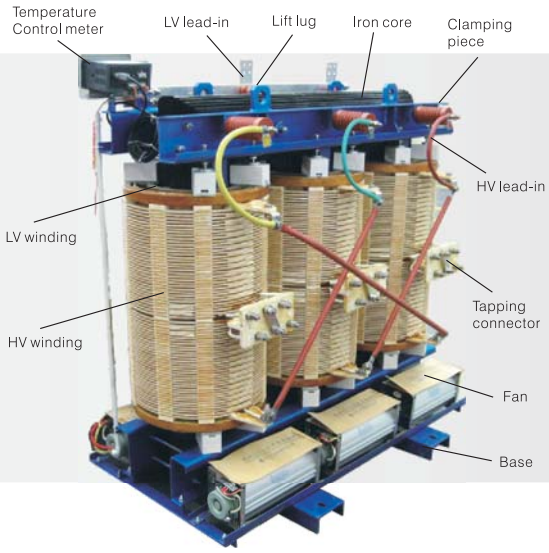

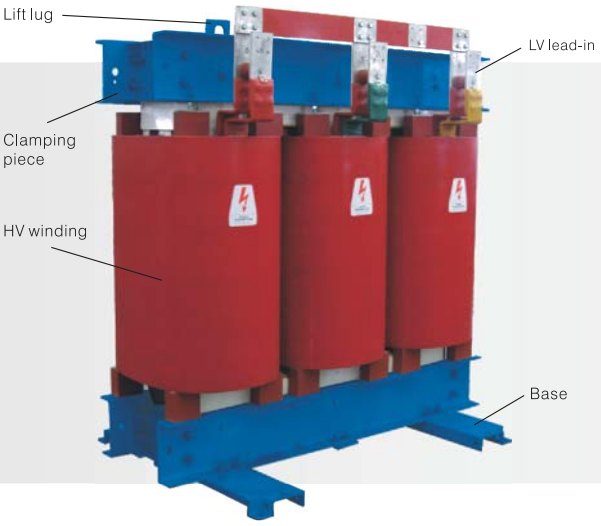

Performance Feature

- Safe, reliable, no pollution, can operate directly in the load center;
- High mechanical strength, strong ability to withstand short circuit, low partial discharge, good thermal stability, high reliability, long use life;
- Low no-load loss, high performance, low noise, efficient energy conservation;
- High thermal performance, high operation capacity, when forced air cooling the capacity can be improved to run;
- Good moisture resistant ability, can operate in high humidity and other harsh environments;
- With features of environmental protection, flame retardant, explosion-proof and free of maintenance;
- Small size, light weight;

3. Structure Feature

3.1 Iron Core

The iron core is made of high quality, cold-rolled, granule-oriented silicon-steel sheets and machined with completely automatic cutting line，superposed with 45 ° six-level bias seams.Core column adopts special banding technique，the surface of iron core is painted with the special rustproof coating to resist humidity and rust,which can effectively reduce the no-load losses, no-load current and iron-core noise.Facilitated with six sets of cutting lines for iron core such as, Soenen from Belgium.

◀ Silicon steel sheet

▼ Core cutting line (transverse)

▲ Cutting line (Slitting)

▲ ③ Automatically stacked silicon steel sheets

▲ ② Silicon steel sheet cutting

▲ ① Sending materials

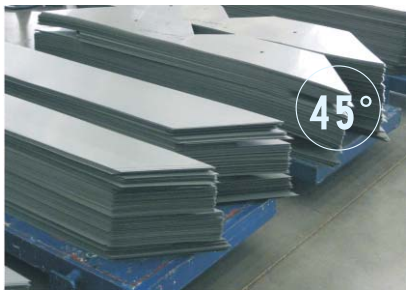

▲ The silicon steel sheet folded

▲ Iron core overlapping

▲ Core joints

▲ Core molding

▲ Amarphous alloy core shearing line

◀ Conveyor feed

Automatic cutting & stack ▶

Iron core rolling machine

▲ Pack up iron core

▲ Rall up iron core

▲ Amorphous alloy core corss sectiong

▲ Fixation

3.2 Winding

F-class insulation HV winding: it is made of lacquered wire. With hardness ranges from 120 to 210 Mpa. The insulation material is a composite of silicon micro-powder and epoxy resin, featuring high performances of good thermal shock resistance,fire resistance, no emission of hazardous gases, good heat dispersion and low winding temperature rise.

▲ F-class insulation HV winding

▶ Epoxy resin composite material

▲ Vacuum casting, drying workshop

▲ HV F-class insulation windings before casting

▲ Vacuum casting equipment from Germany HÜBERS adopts patented technology such as film defoaming and static mixer,ensure the transformer low partial discharge .

▲ Vacuum dry oven

Dry-type Transformer

- H-class insulation HV winding: it adopts NOMEX paper wrapped flat copper wire and continuous winding process. The winding made after dry treatment by VPI vacuum pressure device, several times impregnated in special H class insulating paint,and baking features high mechanical strength, good heat dispersion.

▲ Vacuum impregnation device

▲ HV H-class insulation winding

- LV winding: LV winding is mainly made of foils. It adopts interior argon gas protection welding,with high precision and reliability as no external welding joint. It solves the winding turns imbalance , effectively improves thermal performance and enhance short circuit withstanding capability.

▲ LV foil winding

▲ TUBOLY LV foil winding machine from Switzerland which with constant tension, deburring, automatic bypass system and the corrective function

4. Component

4.1 Protection Enclosure

Protection enclosure can be made of general steel plate,stainless steel plate or aluminum alloy materials. For example, protection enclosure of IP20 can prevent solid object which is 12mm from entering, and this type is suitable for indoor installation. Protection enclosure of IP23 inherits the characters of IP20 enclosure and can prevent water dropping at an angle within 60° to the vertical line from inflooding, as well which is adapted to outdoor installation.

Enclosure of steel plate

Enclosure of stainless steel plate

Enclosure of aluminum alloy plate

4.2 Temperature Control Device

Transformer temperature control protection device adopts double-sensor principle of PTC nonlinearity resistance and PT100 linearity resistance. It has functions of LED temperature display,temperature setting. It can keep highest temperature data, automatically alarm and trip signal and start / stop the fan either automatically or manually. Various special temperature devices can be equipped according to the demand of the customer.

4.3 Air Cooling System

Usually, the cooling system of transformer is natural air cooling(AN),then the transformer can continuously operate at rated power. Cooling system can be provided according to customers' requirements. The fan is controlled automatically by the temperature controller to ensure the normal temperature rise when the load exceeds the rated load.

Temperature control device

Cross-flow cooling fan

5. Quality Management, Product Certificate, After-sales Service

5.1 Quality Management

▲ Testing control room

▲ Lightning impulse generator

▲ Partial discharge test

▲ Power frequency voltage test

Quality Control Management

- **QC System**
  - *Quality Management System: ISO9001*
  - *Environmental Management System: ISO14001*
  - *Occupational Health & Safety Management: OHSAS18001*
  - *Survey Management System: ISO10012*
- **QC Policy**
  - *To create a world famous brand and to provide satisfied products and solutions for customers.*
- **QC Activities**
  - *An independent and systematic QC system, 30 quality control points for each key procedures.*
  - *Training of total quality control philosophy for new employees each year..*
  - *"Quality Month" in May each year to improve quality awareness.*
  - *Internal audit in April every year.*
- **QC Review**
  - *Scheme the quality improvement each year.*
  - *Record and analyze quality loss each month to correct and prevent significant defects.*
- **QC Honors**
  - *National Quality Management Award.*
  - *China Top Quality Management Award.*

Quality Control Application

- **Raw Material**
  - *All the suppliers for raw materials are strictly selected.*
  - *Materials outsourced are strictly tested.*
- **Process Control**
  - *Quality inspectors are responsible for process inspection and final quality inspection.*
  - *Quality engineers are responsible for random inspections and quality auditing.*
- **Delivery & Test**
  - *Finished products are strictly tested before delivery.*
  - *Third party inspection and end user inspection are scheduled before delivery.*
- **Zero Defect**
  - *We adopt the Zero Defect Theory from Philip B. Crosby to make things right from the beginning.*

5.2 Product Certificate

35kV and below dry-type transformer has obtained type test reports from China National Transformer Quality Supervision Testing Center and Electric Power Industry Equipment and Instrument Quality Inspection Testing Center.

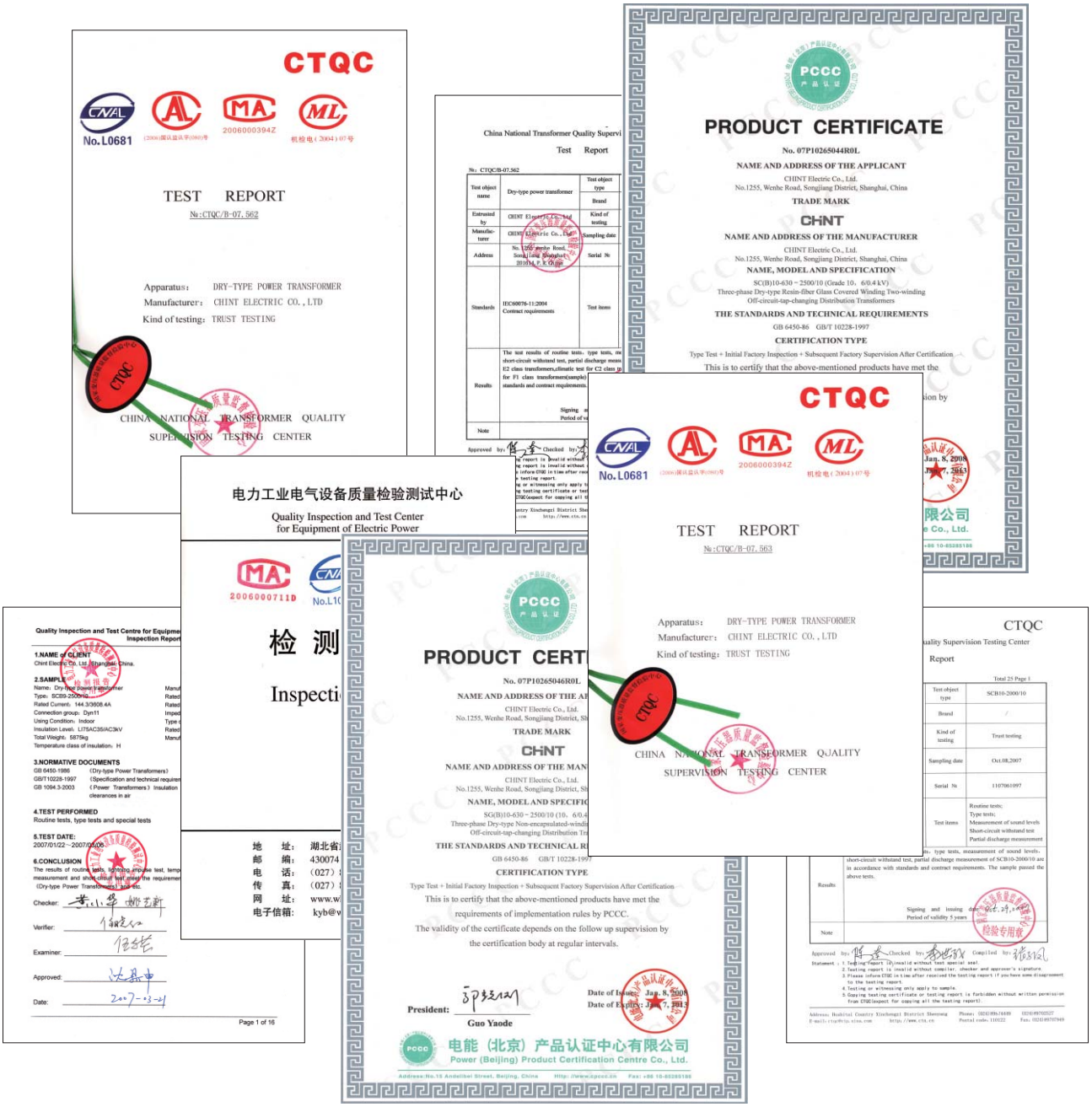

5.3 After-sales Service

After-sales Service

- **After-sales Service Team**
  - Standard procedures with feedback collection, problem tracking and problem shooting.
  - In-time and efficient solutions to solve problems.
  - Systematical service improvement through problem feedback and tracking.
- **After-sales Service Network**
  - Professional engineers are sent abroad for on-site service, installation guidance, maintenance and handing emergencies.
  - Local service partners are selected for installation and maintenance supports.
  - Global service network being built in order to provide convenient local after-sales service to different customers.

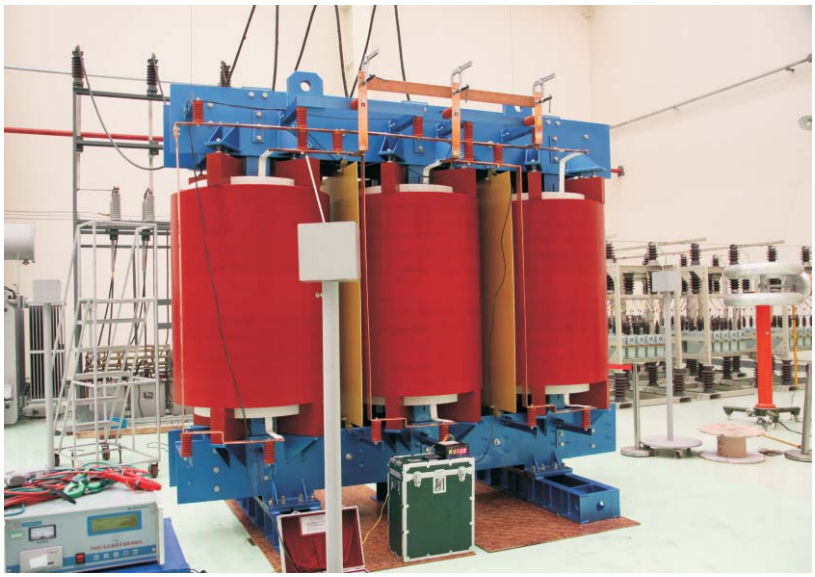

6. Customer-oriented Support System

Professional & Fast customer support system was set up to ensure customer satisfaction.

Customer-oriented Support System

- **Sales Service Team**
  - Multi-language service team.
  - Experienced engineers and sales representatives are chosen to provide professional service and support.
  - Customer-oriented solutions are provided.
- **Customer Oriented**
  - Customized products and solutions are available according to clients' requirements.
  - Customized products meet local standards like AS standard in Australia, etc.
  - Regular internal inspection and supervision on contract execution.
- **Functional Service**
  - Quick-response logistics and finance system to support contract.
  - Strategic collaboration with global renowned logistics service provider to improve global transportation solutions even in tough conditions.
  - Service tracking system and termly customer feedback evaluation system.
- **Punctual Delivery**
  - Large scale production capacity ensures short manufacturing period.
  - Shortest delivery time on special requirements.

10kV Dry-type Transfomer

20kV Dry-type Transfomer

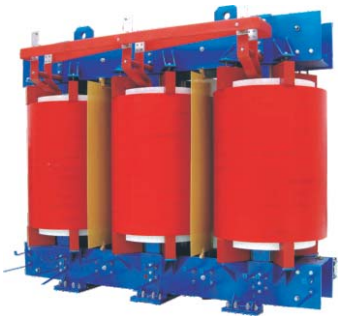

35kV Dry-type Transfomer

7. Main Technical Parameter

7.1 Epoxy Resin Cast Dry-type Transformer

※Note:Customized and more-efficient dry-type transformer is available on your requirements.

7.1.1 9 Series 10kV Free Excitation Voltage Regulation Distribution Transformer — Sheet 1

Model	Voltage combination			Connection symbol	No-load loss (W)	Load loss under F class (W) (120˚C)	No-load current (%)	Short circuit impedance (%)
	HV (kV)	HV tap range	LV (kV)					
SC9-30	6; 6.3; 6.6; 10; 10.5; 11	±5 or ±2×2.5	0.4	Dyn11 or Yyn0	220	750	2.4	4
SC9-50					310	1060	2.4	
SC9-80					420	1460	1.8	
SC9-100					450	1670	1.8	
SC9-125					530	1960	1.6	
SC9-160					610	2250	1.6	
SC(B)9-200					700	2680	1.4	
SC(B)9-250					810	2920	1.4	
SC(B)9-315					990	3670	1.2	
SC(B)9-400					1100	4220	1.2	
SC(B)9-500					1310	5170	1.2	
SC(B)9-630					1510	6220	1.0	
SC(B)9-630					1460	6310	1.0	6
SC(B)9-800					1710	7360	1.0	
SC(B)9-1000					1990	8610	1.0	
SC(B)9-1250					2350	10260	1.0	
SC(B)9-1600					2760	12400	1.0	
SC(B)9-2000					3400	15300	0.8	
SC(B)9-2500					4000	18180	0.8	
SC(B)9-1600					2760	13700	1.0	8
SC(B)9-2000					3400	16900	0.8	
SC(B)9-2500					4000	20000	0.8	

7.1.2 10 Series 10kV Free Excitation Voltage Regulation Distribution Transformer — Sheet 2

Model	Voltage combination			Connection symbol	No-load loss (W)	Load loss under F class (W) (120˚C)	No-load current (%)	Short circuit impedance (%)
	HV (kV)	HV tap range	LV (kV)					
SC10-30	6; 6.3; 6.6; 10; 10.5; 11	±5 or ±2×2.5	0.4	Dyn11 or Yyn0	190	710	2.4	4
SC10-50					270	1000	2.4	
SC10-80					370	1380	1.8	
SC10-100					400	1570	1.8	
SC10-125					470	1850	1.6	
SC10-160					540	2130	1.6	
SC(B)10-200					620	2530	1.4	
SC(B)10-250					720	2760	1.4	
SC(B)10-315					880	3470	1.2	
SC(B)10-400					980	3990	1.2	
SC(B)10-500					1160	4880	1.2	
SC(B)10-630					1340	5880	1.0	
SC(B)10-630					1300	5960	1.0	6
SC(B)10-800					1520	6960	1.0	
SC(B)10-1000					1770	8130	1.0	
SC(B)10-1250					2090	9690	1.0	
SC(B)10-1600					2450	11730	1.0	
SC(B)10-2000					3050	14450	0.8	
SC(B)10-2500					3600	17170	0.8	
SC(B)10-1600					2450	12960	1.0	8
SC(B)10-2000					3050	15960	0.8	
SC(B)10-2500					3600	18890	0.8	

7.1.3 9 Series 20kV Free Excitation Voltage Regulation Distribution Transformer

Sheet 3

Model	Voltage combination			Connection symbol	No-load loss (W)	Load loss under F class (W) (120℃)	No-load current (%)	Short circuit impedance (%)
	HV (kV)	HV tap range	LV (kV)					
SC9-50	20; 22; 24	±5 or ±2×2.5	0.4	Dyn11 or Yyn0	380	1300	2.4	6
SC9-100					600	2100	2.2	
SC9-160					750	2600	1.8	
SC(B)9-200					820	3100	1.8	
SC(B)9-250					940	3600	1.6	
SC(B)9-315					1080	4300	1.6	
SC(B)9-400					1280	5100	1.4	
SC(B)9-500					1500	6100	1.4	
SC(B)9-630					1700	7200	1.2	
SC(B)9-800					1950	8700	1.2	
SC(B)9-1000					2300	10300	1.0	
SC(B)9-1250					2650	12150	1.0	
SC(B)9-1600					3100	14600	1.0	
SC(B)9-2000					3600	17250	0.8	
SC(B)9-2500					4300	20400	0.8	8
SC(B)9-2000					3600	18800	0.8	
SC(B)9-2500					4300	22400	0.8	

7.1.4 10 Series 20kV Free Excitation Voltage Regulation Distribution Transformer

Sheet 4

Model	Voltage combination			Connection symbol	No-load loss (W)	Load loss under F class (W) (120℃)	No-load current (%)	Short circuit impedance (%)
	HV (kV)	HV tap range	LV (kV)					
SC10-50	20; 22; 24	±5 or ±2×2.5	0.4	Dyn11 or Yyn0	345	1235	2.4	6
SC10-100					540	1995	2.2	
SC10-160					675	2470	1.8	
SC(B)10-200					740	2945	1.8	
SC(B)10-250					845	3420	1.6	
SC(B)10-315					975	4085	1.6	
SC(B)10-400					1155	4845	1.4	
SC(B)10-500					1350	5795	1.4	
SC(B)10-630					1530	6840	1.2	
SC(B)10-800					1755	8265	1.2	
SC(B)10-1000					2070	9785	1.0	
SC(B)10-1250					2385	11545	1.0	
SC(B)10-1600					2790	13870	1.0	
SC(B)10-2000					3240	16390	0.8	
SC(B)10-2500					3870	19380	0.8	
SC(B)10-2000					3240	17860	0.8	8
SC(B)10-2500					3870	21280	0.8	

7.1.5 9 Series 35kV Free Excitation Voltage Regulation Distribution Transformer

Sheet 5

Model	Voltage combination			Connection symbol	No-load loss (W)	Load loss under F class (W) (120℃)	No-load current (%)	Short circuit impedance (%)
	HV (kV)	HV tap range	LV (kV)					
SC9-50	35~38.5	±5 or ±2×2.5	0.4	Dyn11 or Yyn0	500	1500	2.8	6
SC9-100					700	2200	2.4	
SC9-160					880	2960	1.8	
SC(B)9-200					980	3500	1.8	
SC(B)9-250					1100	4000	1.6	
SC(B)9-315					1310	4750	1.6	
SC(B)9-400					1530	5700	1.4	
SC(B)9-500					1800	7000	1.4	
SC(B)9-630					2070	8100	1.2	
SC(B)9-800					2400	9600	1.2	
SC(B)9-1000					2700	11000	1.0	
SC(B)9-1250					3150	13400	0.9	
SC(B)9-1600					3600	16300	0.9	
SC(B)9-2000					4250	19200	0.9	
SC(B)9-2500					4950	23000	0.9	

7.1.6 9 Series 35kV Free Excitation Voltage Regulation Power Transformer

Sheet 6

Model	Voltage combination			Connection symbol	No-load loss (W)	Load loss under F class (W) (120℃)	No-load current (%)	Short circuit impedance (%)
	HV (kV)	HV tap range	LV (kV)					
SC(B)9-800	35~38.5	±5 or ±2×2.5	3.15 6 6.3 10 10.5 11	Dyn11 Yd11 Yyn0	2500	9900	1.1	6
SC(B)9-1000					2970	11500	1.1	
SC(B)9-1250					3480	13600	1.0	
SC(B)9-1600					4100	16300	1.0	
SC(B)9-2000					4700	19200	0.9	7
SC(B)9-2500					5400	23000	0.9	
SC(B)9-3150					6700	25800	0.8	8
SC(B)9-4000					7800	31000	0.8	
SC(B)9-5000					9300	36800	0.7	
SC(B)9-6300					11000	43000	0.7	
SC(B)9-8000				Dyn11 Yd11,YNd11	12600	48500	0.6	9
SC(B)9-10000					14400	58500	0.6	

7.2 H-Class Impregnated Insulated Dry-type Transformer

7.2.1 9 Series 10kV Free Excitation Voltage Regulation Distribution Transformer

Sheet 7

Model	Voltage combination			Connection symbol	No-load loss (W)	Load loss under H class (W) (145℃)	No-load current (%)	Short circuit impedance (%)
	HV (kV)	HV tap range	LV (kV)					
SG9-100	6; 6.3; 6.6; 10; 10.5; 11	±5 or ±2×2.5	0.4	Dyn11 or Yyn0	450	1780	1.8	4
SG9-125					530	2100	1.6	
SG9-160					610	2410	1.6	
SG9-200					700	2870	1.4	
SG9-250					810	3120	1.4	
SG(B)9-315					990	3930	1.2	
SG(B)9-400					1100	4520	1.2	
SG(B)9-500					1310	5530	1.2	
SG(B)9-630					1510	6660	1.0	
SG(B)9-630					1460	6750	1.0	6
SG(B)9-800					1710	7880	1.0	
SG(B)9-1000					1990	9210	1.0	
SG(B)9-1250					2350	10980	1.0	
SG(B)9-1600					2760	13270	1.0	
SG(B)9-2000					3400	16370	0.8	
SG(B)9-2500					4000	19460	0.8	
SG(B)9-1600					2760	14660	1.0	8
SG(B)9-2000					3400	18000	0.8	
SG(B)9-2500					4000	21400	0.8	

7.2.2 10 Series 10kV Free Excitation Voltage Regulation Distribution Transformer

Sheet 8

Model	Voltage combination			Connection symbol	No-load loss (W)	Load loss under H class (W) (145℃)	No-load current (%)	Short circuit impedance (%)
	HV (kV)	HV tap range	LV (kV)					
SG10-100	6; 6.3; 6.6; 10; 10.5; 11	±5 or ±2×2.5	0.4	Dyn11 or Yyn0	400	1690	1.8	4
SG10-125					470	1980	1.6	
SG10-160					540	2280	1.6	
SG10-200					620	2710	1.4	
SG10-250					720	2960	1.4	
SG(B)10-315					880	3730	1.2	
SG(B)10-400					980	4280	1.2	
SG(B)10-500					1160	5230	1.2	
SG(B)10-630					1340	6290	1.0	
SG(B)10-630					1300	6400	1.0	6
SG(B)10-800					1520	7460	1.0	
SG(B)10-1000					1770	8760	1.0	
SG(B)10-1250					2090	10370	1.0	
SG(B)10-1600					2450	12580	1.0	
SG(B)10-2000					3050	15560	0.8	
SG(B)10-2500					3600	18450	0.8	
SG(B)10-1600					2450	13900	1.0	8
SG(B)10-2000					3050	17110	0.8	
SG(B)10-2500					3600	20290	0.8	

7.3 Amorphous Alloy Core Dry-type Transformer

7.3.1 General

Application: applicable for all places where common dry-type transformers are used, such as high-rise buildings, commercial centers, airports, oil platforms, subways, tunnels, airports, railway stations, industrial and mining enterprises and power plants. It is especially suitable for places which are flammable and explosive.

7.3.2 Standard

IEC 60076-11:2004 Dry type power transformer

7.3.3 Main Technical Parameter

Sheet 9

Model	Voltage combination			Connection symbol	No-load loss (W)	Load loss (W)			No-load current (%)	Short circuit impedance (%)
	HV (kV)	HV tap range	LV (kV)			100℃ (B)	125℃ (F)	145℃ (H)		
SCBH15-30	6 6.3 6.6 10 10.5 11	±5 or ±2×2.5	0.4	Dyn11	70	670	710	760	1.6	4
SCBH15-50					90	940	1000	1070	1.4	
SCBH15-80					120	1290	1380	1480	1.3	
SCBH15-100					130	1480	1570	1690	1.2	
SCBH15-125					150	1740	1850	1980	1.1	
SCBH15-160					170	2000	2130	2280	1.1	
SCBH15-200					200	2370	2530	2710	1.0	
SCBH15-250					230	2590	2760	2960	1.0	
SCBH15-315					280	3270	3470	3730	0.9	
SCBH15-400					310	3750	3990	4280	0.8	
SCBH15-500					360	4590	4880	5230	0.8	
SCBH15-630					420	5530	5880	6290	0.7	
SCBH15-630					410	5610	5960	6400	0.7	6
SCBH15-800					480	6550	6960	7460	0.7	
SCBH15-1000					550	7650	8130	8760	0.6	
SCBH15-1250					650	9100	9690	10370	0.6	
SCBH15-1600					760	11050	11730	12580	0.6	
SCBH15-2000					1000	13600	14450	15560	0.5	
SCBH15-2500					1200	16150	17170	18450	0.5	
SCBH15-1600					760	12280	12960	13900	0.6	8
SCBH15-2000					1000	15020	15960	17110	0.5	
SCBH15-2500					1200	17760	18890	20290	0.5	

Note: (1) The values of load loss (W) listed in the sheet 9 are under particular temperature levels corresponding with specific insulated heat-resistant levels listed in the parenthesises.

(2) If user adopts other connection symbols, the specific technical requirements are negotiable between the manufacturer and the user.

8. Overall and Installation Dimension

8.1 Epoxy Resin Cast Dry-type Transformer

SC(B)9/10 Series,10kV

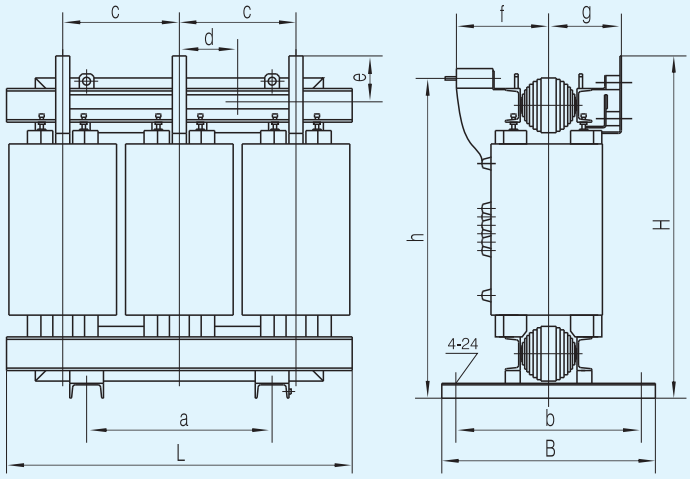

a/b/c Phase Connection Terminal, LV

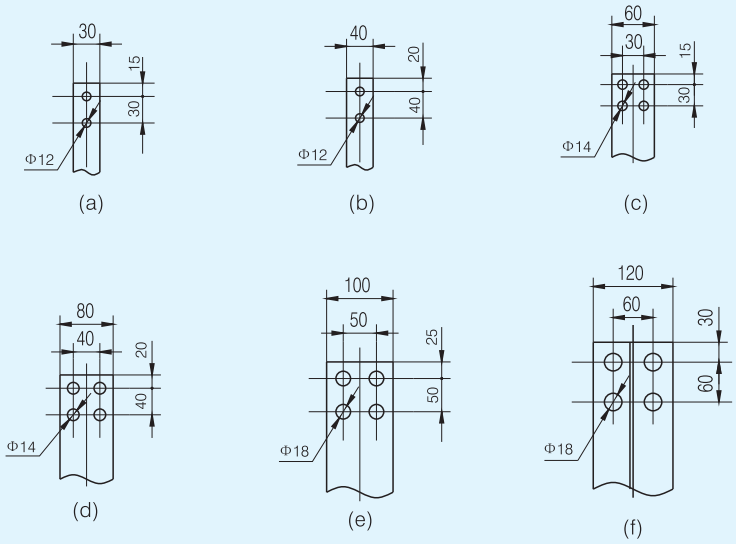

Neutral Point Connection Terminal, LV

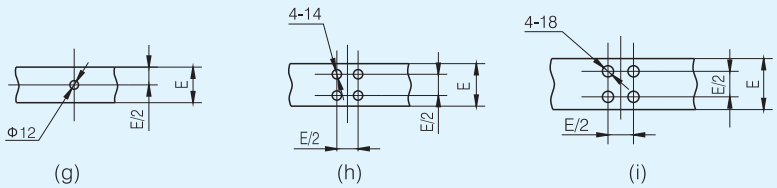

Note: The width(dimension E) of the bus bar of the connection terminals in the LV neutral point is equivalent to the width of the bus bar of the connection terminals in LV a/b/c phase.

8.1.1 Dimension of Transformer Body of SC(B)9 Series,10kV (unit: mm) Sheet 10

Model	Short circuit impedance(%)	Overall dimension			Installation dimension		c	d	e	f	g	h	LV Terminal	
		L	B	H	a	b							a/b/c Phase	Neutral Point
SC9-30/10	4	870	500	935	400	400	290	145	175	275	185	850	(a)	(g)
SC9-50/10		900	500	955	400	400	305	150	175	280	190	875	(a)	(g)
SC9-80/10		960	500	995	400	400	325	160	175	285	195	915	(a)	(g)
SC9-100/10		990	650	1045	550	550	335	165	175	295	205	960	(a)	(g)
SC9-125/10		1030	650	1060	550	550	350	175	175	300	210	980	(a)	(g)
SC9-160/10		1080	650	1110	550	550	365	180	175	305	215	1030	(a)	(g)
SC9-200/10		1180	760	1160	660	660	395	197.5	150	315	245	1070	(a)	(g)
SC9-250/10		1200	760	1200	660	660	405	202.5	120	320	245	1110	(a)	(g)
SC9-315/10		1230	760	1240	660	660	415	210	180	325	250	1145	(b)	(g)
SC9-400/10		1300	760	1280	660	660	440	200	180	335	270	1200	(c)	(h)
SC9-500/10		1350	920	1405	660	820	455	225	200	345	280	1305	(d)	(h)
SC9-630/10		1500	920	1398	660	820	480	240	200	337	300	1298	(d)	(h)
SC9-630/10	6	1525	920	1333	660	820	485	242.5	195	333	321	1233	(d)	(h)
SC9-800/10		1670	920	1393	660	820	530	265	195	342	334	1293	(d)	(h)
SC9-1000/10		1650	920	1458	660	820	535	267.5	220	349	321	1358	(d)	(h)
SC9-1250/10		1780	920	1628	820	820	560	280	225	360	347.5	1538	(e)	(i)
SC9-1600/10		1850	1170	1658	1070	1070	600	300	240	369	360.2	1558	(e)	(i)
SC9-2000/10		2070	1170	1766	1070	1070	650	325	265	387.5	382.5	1655.5	(f)	(i)
SC9-2500/10		2100	1170	2160	1070	1070	695	347.5	275	497	438	2009.5	(f)	(i)

Note: (1) H is the height from temperature controller to the base if rated capacity is ⩾630 kVA.
(2) Customized products are available.

8.1.2 Dimension of Transformer Body of SC(B)10 Series,10kV (unit: mm) Sheet 11

Model	Short circuit impedance(%)	Overall dimension			Installation dimension		c	d	e	f	g	h	LV Terminal	
		L	B	H	a	b							a/b/c Phase	Neutral Point
SC10-30/10	4	870	500	935	400	400	290	145	175	275	185	850	(a)	(g)
SC10-50/10		900	500	955	400	400	305	150	175	280	190	875	(a)	(g)
SC10-80/10		960	500	995	400	400	325	160	175	285	195	915	(a)	(g)
SC10-100/10		990	650	1045	550	550	335	165	175	295	205	960	(a)	(g)
SC10-125/10		1030	650	1060	550	550	350	175	175	300	210	980	(a)	(g)
SC10-160/10		1080	650	1110	550	550	365	180	175	305	215	1030	(a)	(g)
SC10-200/10		1180	760	1160	660	660	395	197.5	150	315	245	1070	(a)	(g)
SC10-250/10		1200	760	1200	660	660	405	202.5	120	320	245	1110	(a)	(g)
SC10-315/10		1230	760	1240	660	660	415	210	180	325	250	1145	(b)	(g)
SC10-400/10		1300	760	1280	660	660	440	200	180	335	270	1200	(c)	(h)
SC10-500/10		1350	920	1405	660	820	455	225	200	345	280	1305	(d)	(h)
SC10-630/10		1500	920	1398	660	820	480	240	200	337	300	1298	(d)	(h)
SC10-630/10	6	1525	920	1333	660	820	485	242.5	195	333	321	1233	(d)	(h)
SC10-800/10		1640	920	1453	660	820	510	255	195	337	320	1353	(d)	(h)
SC10-1000/10		1640	920	1520.5	660	820	530	265	220	342	340	1420.5	(d)	(h)
SC10-1250/10		1780	920	1628	820	820	560	280	225	360	347.5	1538	(e)	(i)
SC10-1600/10		1910	1170	1728	1070	1070	610	305	240	374	365	1638	(e)	(i)
SC10-2000/10		2070	1170	1815.5	1070	1070	625	312.5	265	383	382.5	1705.5	(f)	(i)
SC10-2500/10		2100	1170	2159.5	1070	1070	695	347.5	275	497	438	2009.5	(f)	(i)

Note: (1) H is the height from temperature controller to the base if rated capacity is ⩾630 kVA.
(2) Customized products are available.

Dimension of the enclosure of SC(B) series,10kV

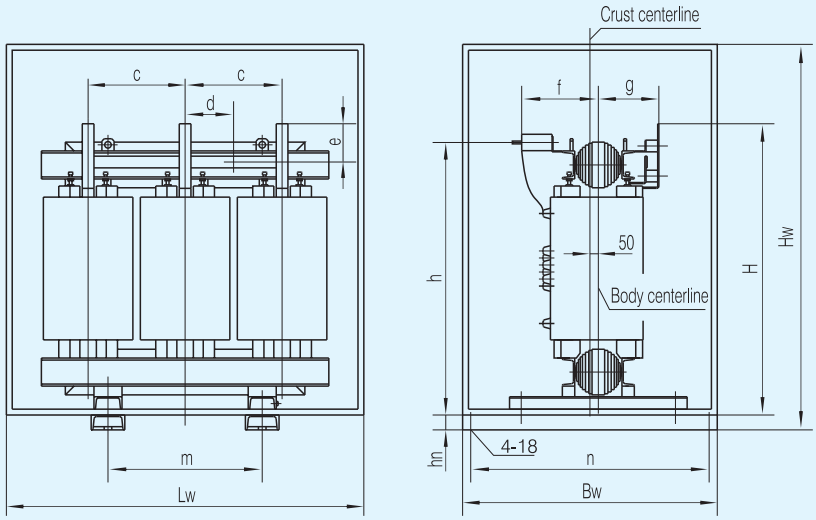

8.1.3 Dimension of the enclosure of SC(B)9/10 Series,10kV (unit: mm)

Sheet 12

Model	Short circuit impedance(%)	Overall dimension			Installation dimension		c	d	e	f	g	h	H	hn
		Lw	Bw	Hw	m	n								
SC9, 10-125/10	4	1550	1150	1700	550	1090	350	175	175	300	210	980	1060	140
SC9, 10-160/10		1550	1150	1700	550	1090	365	180	175	305	215	1030	1110	140
SC(B)9, 10-200/10		1550	1150	1700	660	1090	395	197.5	150	315	245	1070	1160	140
SC(B)9, 10-250/10		1550	1150	1700	660	1090	405	202.5	120	320	245	1110	1200	140
SC(B)9, 10-315/10		1550	1150	1700	660	1090	415	210	180	325	250	1145	1240	140
SC(B)9, 10-400/10		1700	1200	1750	660	1140	440	200	180	335	270	1200	1280	140
SC(B)9, 10-500/10		1700	1200	1750	660	1140	455	225	200	345	280	1305	1405	140
SC(B)9, 10-630/10		1700	1200	1750	660	1140	455	210	200	345	290	1305	1405	140
SC(B)9, 10-630/10	6	1800	1300	1900	660	1240	485	225	195	340	280	1315	1415	140
SC(B)9, 10-800/10		1800	1300	1900	660	1240	500	250	195	345	280	1380	1480	140
SC(B)9, 10-1000/10		1900	1300	2000	660	1240	520	260	220	350	290	1445	1575	140
SC(B)9, 10-1250/10		1950	1400	2100	820	1340	540	270	225	350	290	1625	1740	140
SC(B)9, 10-1600/10		2100	1500	2200	1070	1440	570	285	240	365	305	1660	1790	140
SC(B)9, 10-2000/10		2250	1500	2300	1070	1440	605	300	265	380	320	1760	1910	140
SC(B)9, 10-2500/10		2400	1600	2500	1070	1540	645	645	275	430	337	1855	2005	140

Note: (1) Customized products are available.

8.2 H-Class Impregenated Insulated Dry-type Transformer

Dimension of Transformer Body of SG(B)Series

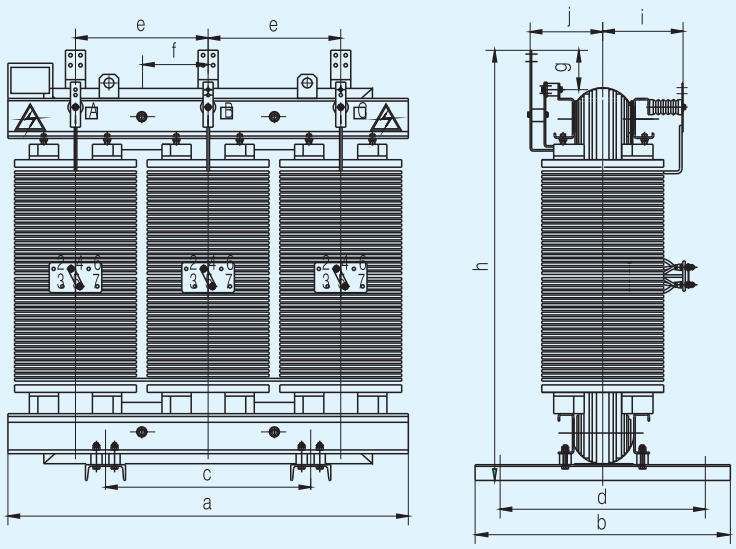

LV Connection Terminal

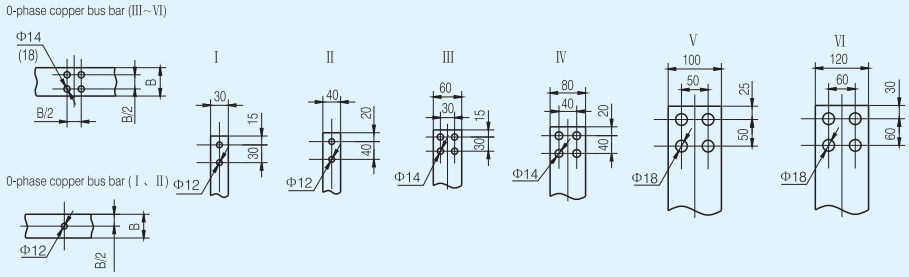

8.2.1 Dimension of Transformer Body of SG(B) Series (unit: mm) Sheet 13

Model	a	b	c	d	e	f	g	h	i	j	Copper Bus Bar	Overall dimension
SG10-100/10	1060	650	550	550	335	168	100	1150	285	225	I	1550×1200×1800
SG10-160/10	1100	650	550	550	360	180	105	1200	290	230	I	1550×1200×1800
SG10-200/10	1160	650	660	550	390	195	100	1280	290	240	I	1550×1200×1800
SG10-250/10	1180	760	660	660	400	200	115	1300	290	250	I	1550×1200×1800
SG(B)10-315/10	1180	760	660	660	400	200	110	1360	300	250	II	1700×1200×1900
SG(B)10-400/10	1200	780	660	660	410	205	100	1430	300	260	III	1750×1400×1900
SG(B)10-500/10	1270	780	660	660	430	215	118	1500	305	265	III	1750×1400×1950
SG(B)10-630/10	1400	780	660	660	475	238	115	1435	315	270	III	1850×1400×1950
SG(B)10-800/10	1480	940	660	660	490	245	212	1590	325	300	IV	1950×1400×2100
SG(B)10-1000/10	1550	940	820	820	525	263	215	1570	340	310	IV	2000×1500×2100
SG(B)10-1250/10	1600	940	820	820	530	265	240	1695	340	305	V	2050×1500×2200
SG(B)10-1600/10	1740	1200	820	1070	585	293	173	1705	355	345	V	2200×1500×2200
SG(B)10-2000/10	1780	1270	1070	1070	595	298	181	1790	365	350	V	2250×1500×2400
SG(B)10-2500/10	1920	1270	1070	1070	625	313	205	2070	430	350	VI	2400×1500×2600

Note: (1) The above data is just for reference.
(2) Customized products are available.

Dimension of the enclosure of SG(B)Series

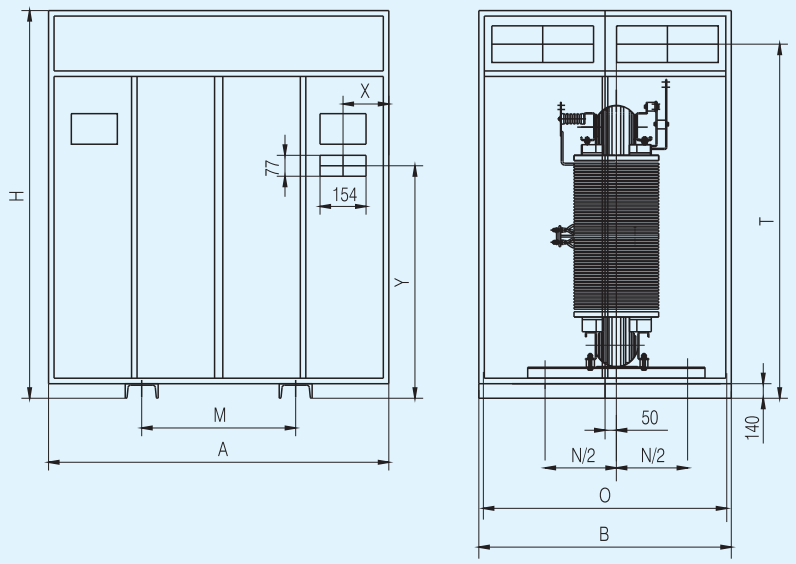

8.2.2 Dimension of the enclosure of SG(B)Series (unit: mm)

Sheet 14

Model	A	B	H	M	N	O	T	X	Y	Enclosure Dimension
SG10-100/10	1550	1200	1800	550	550	1140				1550×1200×1800
SG10-160/10	1550	1200	1800	550	550	1140				1550×1200×1800
SG10-200/10	1550	1200	1800	660	550	1140				1550×1200×1800
SG10-250/10	1550	1200	1800	660	660	1140				1550×1200×1800
SG(B)10-315/10	1700	1200	1900	660	660	1140				1700×1200×1900
SG(B)10-400/10	1750	1400	1900	660	660	1340				1750×1400×1900
SG(B)10-500/10	1750	1400	1950	660	660	1340				1750×1400×1950
SG(B)10-630/10	1850	1400	1950	660	660	1340				1850×1400×1950
SG(B)10-800/10	1950	1400	2100	660	660	1340				1950×1400×2100
SG(B)10-1000/10	2000	1500	2100	820	820	1440				2000×1500×2100
SG(B)10-1250/10	2050	1500	2200	820	820	1440				2050×1500×2200
SG(B)10-1600/10	2200	1500	2200	820	1070	1440				2200×1500×2200
SG(B)10-2000/10	2250	1500	2400	1070	1070	1440				2250×1500×2400
SG(B)10-2500/10	2400	1500	2600	1070	1070	1440				2400×1500×2600

Note: (1) Customized products are available.

8.3 Amorphous Alloy Core Dry-type Transformer
Customized products are available.

9. Ordering Information

Please indicate the folloWing technical parameters when ordering:
Product type, rated capacity, voltage ratio and tap, connection way, impedance voltage, no-load loss, on-load loss, insulation class, rated frequency, insulation level, environment temperature, altitude, standard, air cooling system, temperature control system, protection degree of the enclosure, color of the enclosure and other particular requirements."

Note

Available Product Range from CHINT Electric:

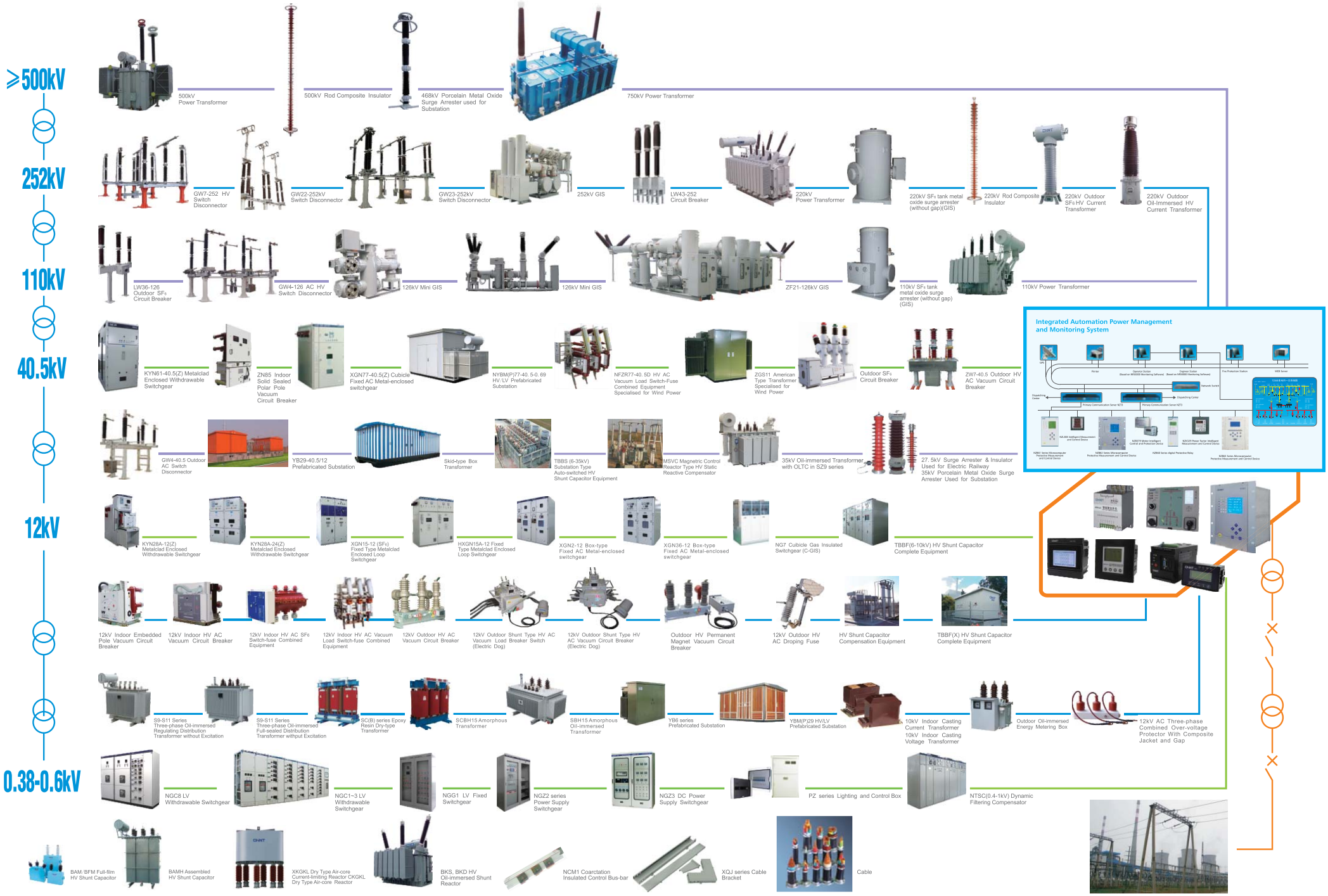

International Business:

Attributed to our reliable quality and perfect after-sales service, CHINT Electric has been relied on and entrusted with by many of our clients around the world.
We will continue to supply best products and try hard to win more compliments through our best service.

For inquiries, further interests for products cooperation, partnership, international alliance,investment discussion with us, please contact the following representatives.

Area	Representative	Tel	E-mail
Asia–Pacific	Selina Peng	(+86) 21 6777 7777 ext.80917	pengxuan@chint.com
Latin America	Bill Han	(+86) 21 6777 7777 ext.80911	hanzl@chint.com
North America	Xufeng Jiang	(+86) 21 6777 7777 ext.80990	jxfeng@chint.com
Europe	York Zhi	(+86) 21 6777 7777 ext.80925	zhiy@chint.com
Africa & Middle East	Logan Liu	(+86) 21 6777 7777 ext.89006	lwgen@chint.com
Russia–Speaking Countries	Andrey Tao	(+86) 21 6777 7777 ext.80965	taozc0331@chint.com

Chint Electric Co., Ltd.
No.3255 Sixian Road, Songjiang District, 201614,
Shanghai, China
Tel: (+86)–21–6777 7706
(+86)–21–6777 7777 ext. 80911
Fax: (+86)–21–6777 7722
E–mail: chintengineering@chint.com
Http://en.chintelectric.com

© CHINT. NO. 2014-003EN1010

The contents and data in this catalogue are for reference only. The real order requirements and technical agreements shall prevail. The catalogue is subject to change without further notice. The latest edition is recommended.
CHINT reserves the right of interpretation.